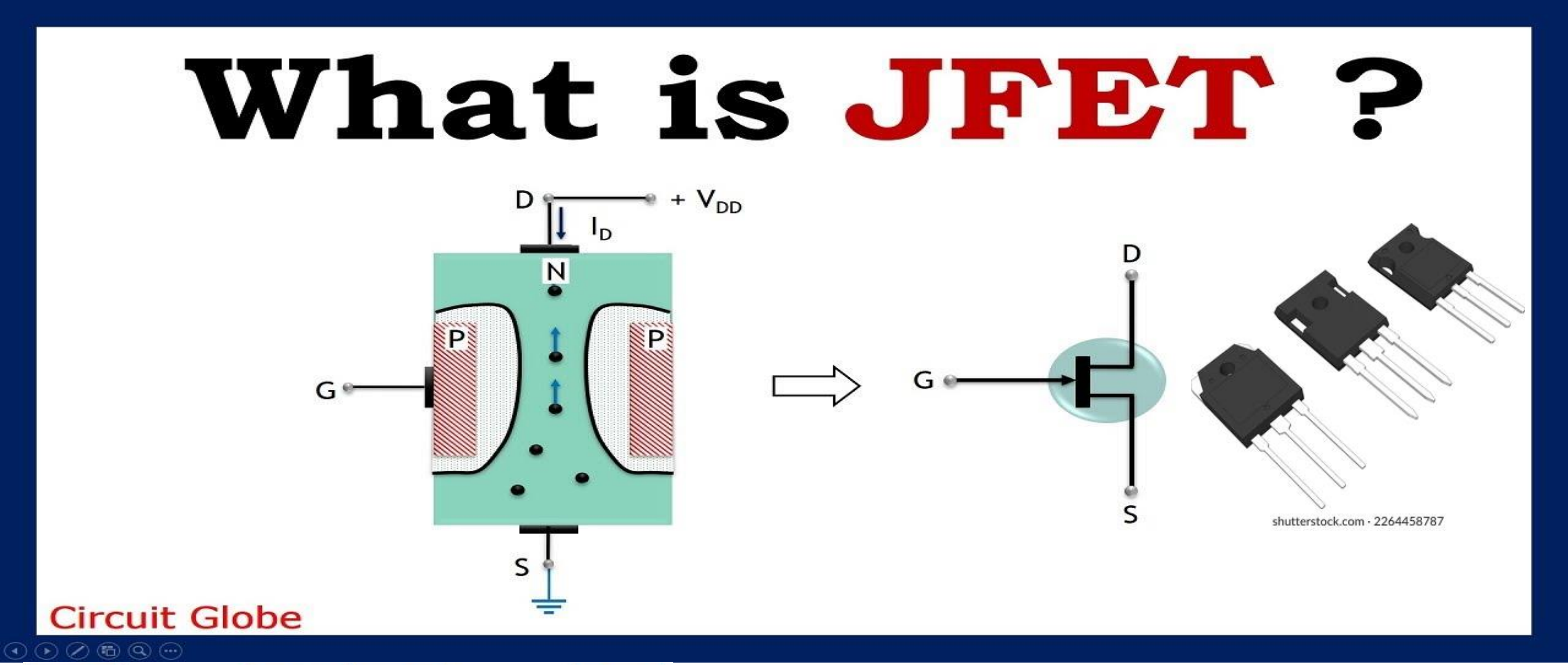

What is JFET ?

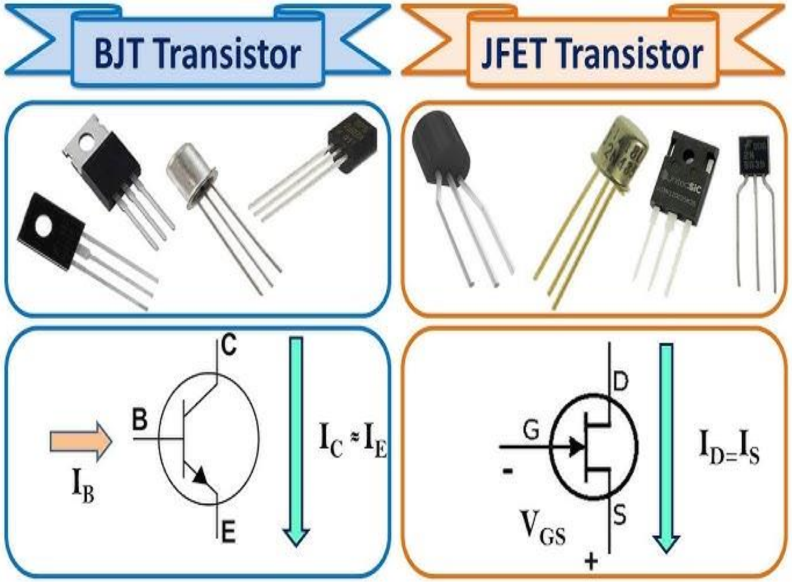

Ms. R.GOWTHAR
ASSISTANT PROFESSOR
DEPARTMENT OF PHYSICS
JAMAL MOHAMED COLLEGE
TRICHY 20

Field Effect Transistor

Field effect Transistor is a semiconductor device which depends for its operation on the control of current by an electric Field

Field Effect Transistor (FET)

- FET is a voltage controled device.
- It consists of three terminal .
  - Gate
  - Source
  - Drain
- It is classified as four types.

Typical Field Effect Transistor

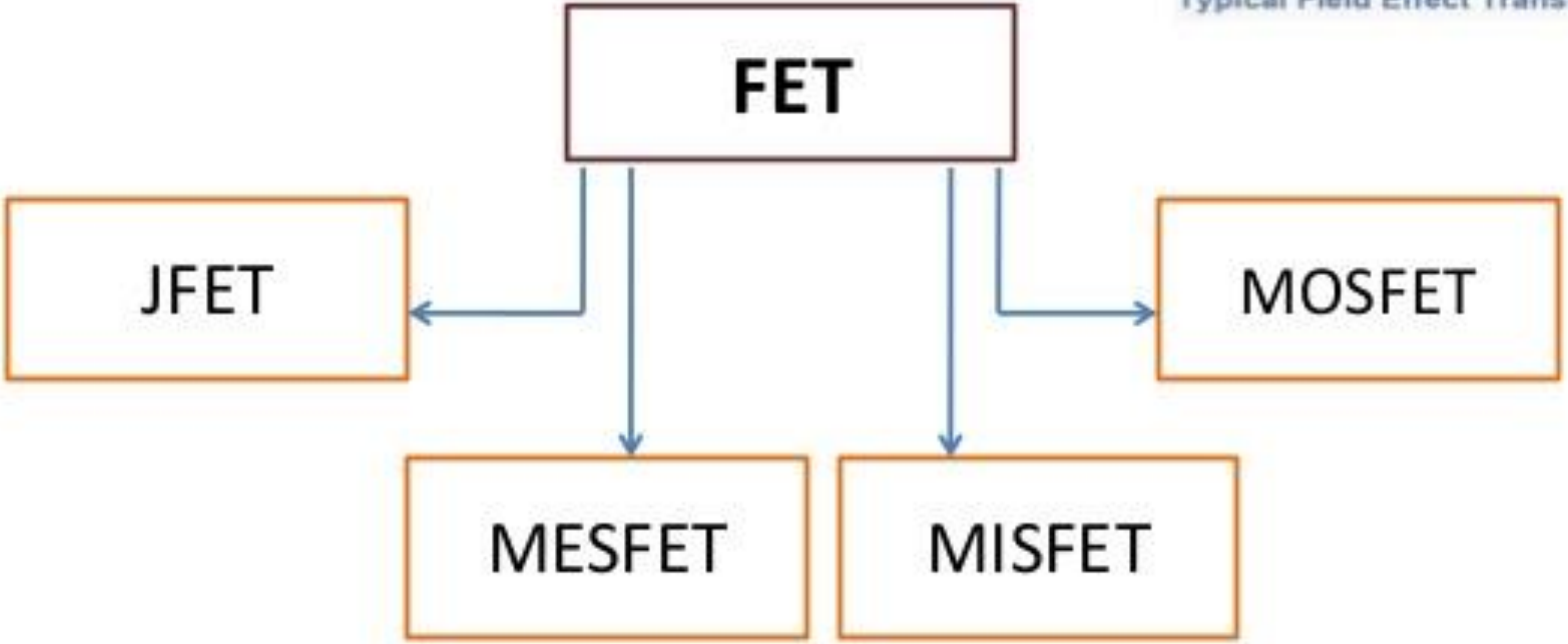

FET

JFET

MESFET

MISFET

MOSFET

Junction Field Effect Transistor (JFET)

- **Junction Field Effect Transistor** is a three terminal semiconductor device in which current conducted by one type of carrier i.e. by electron or hole.

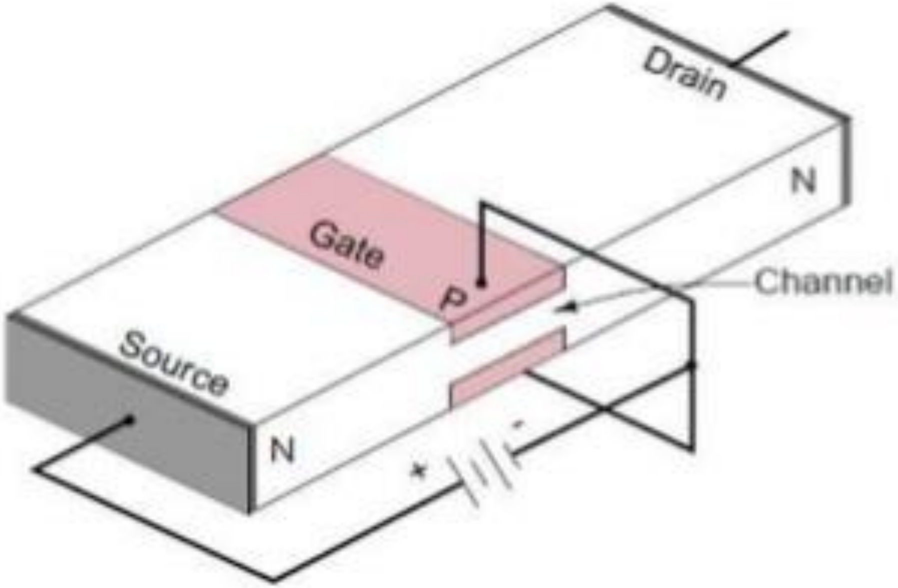

Junction field effect transistor

Junction field-effect transistor (JFET)

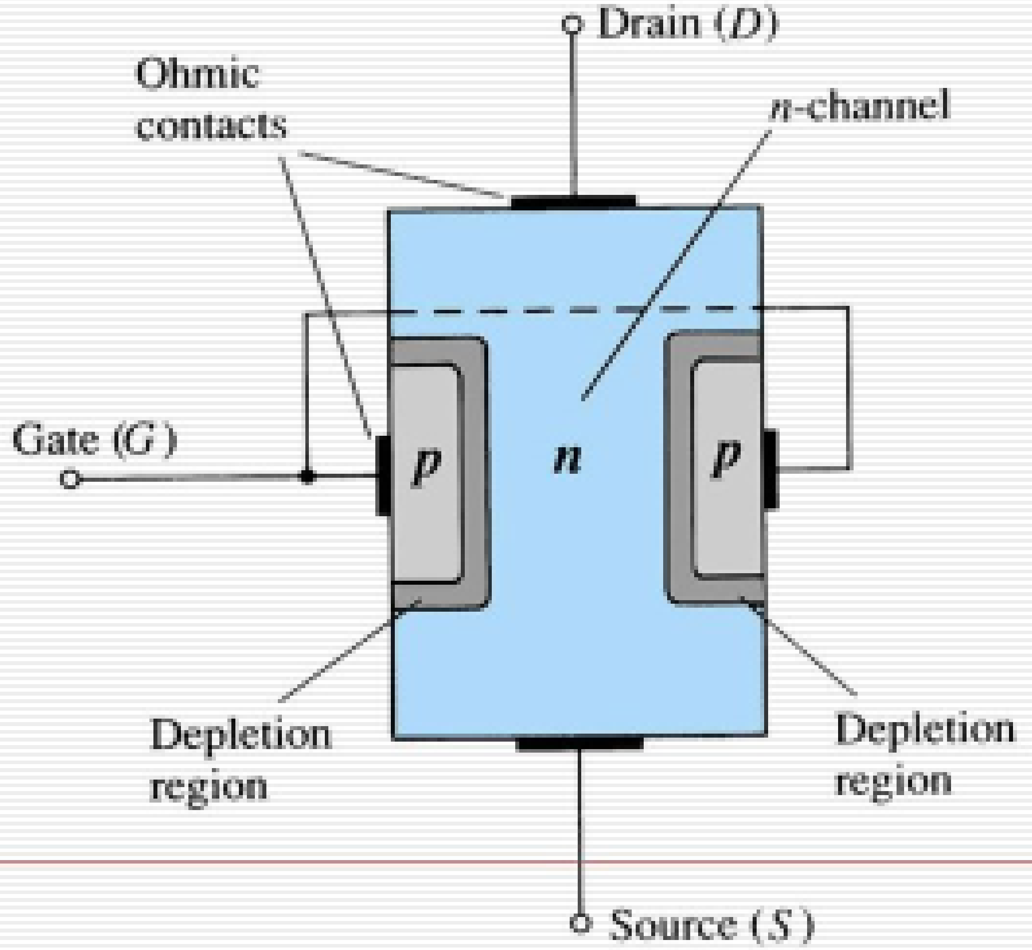

FET and BJT

FET	BJT
1. Uni polar device	1. Bipolar device
2. Voltage controlled Device	2. Current controlled device
3. High input impedance (in Mega ohms)	3. Low input impedance
4. Better thermal stability	4. Low thermal stabilty
5. High switching speeds	5. Lower switching speeds
6. Less Noisy	6. More noisy
7. Easy to fabricate	7. Diffuicult to fabricate on IC

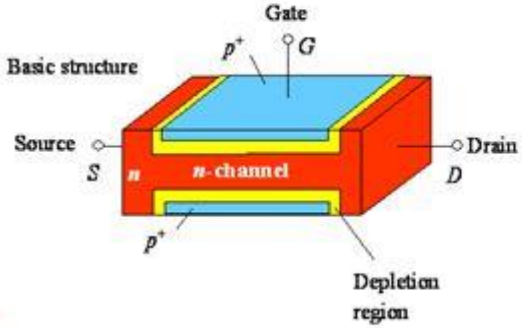

Junction FETs

- JFET is a high-input resistance device, while the BJT is comparatively low.
- If the channel is doped with a donor impurity, n-type material is formed and the channel current will consist of electrons.
- If the channel is doped with an acceptor impurity, p-type material will be formed and the channel current will consist of holes.
- N-channel devices have greater conductivity than p-channel types, since electrons have higher mobility than do holes; thus n-channel JFETs are approximately twice as efficient conductors compared to their p-channel counterparts.

Symbol of JFET

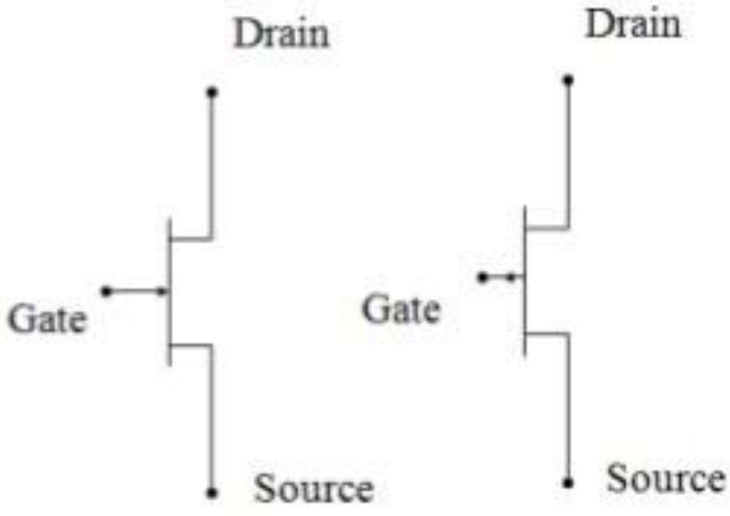

n-channel JFET

p-channel JFET

Construction of JFET

❑ **Source:** The terminal through which the majority carriers enter into the channel, is called the *source* terminal S .

❑ **Drain:** The terminal, through which the majority carriers leave from the channel, is called the *drain* terminal D .

❑ **Gate**: There are two internally connected heavily doped impurity regions to create two P-N junctions. These impurity regions are called the *gate* terminal G.

❑ **Channel**: The region between the source and drain, sandwiched between the two gates is called the *channel* .

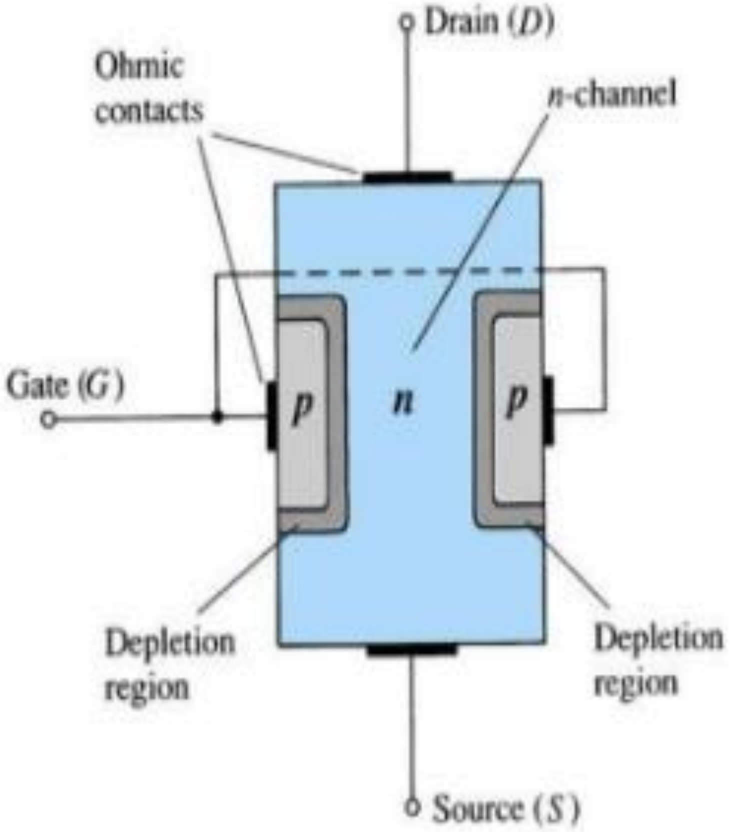

Types of JFET

- JFET has two types :
  - n- Channel JFET
  - p- Channel JFET

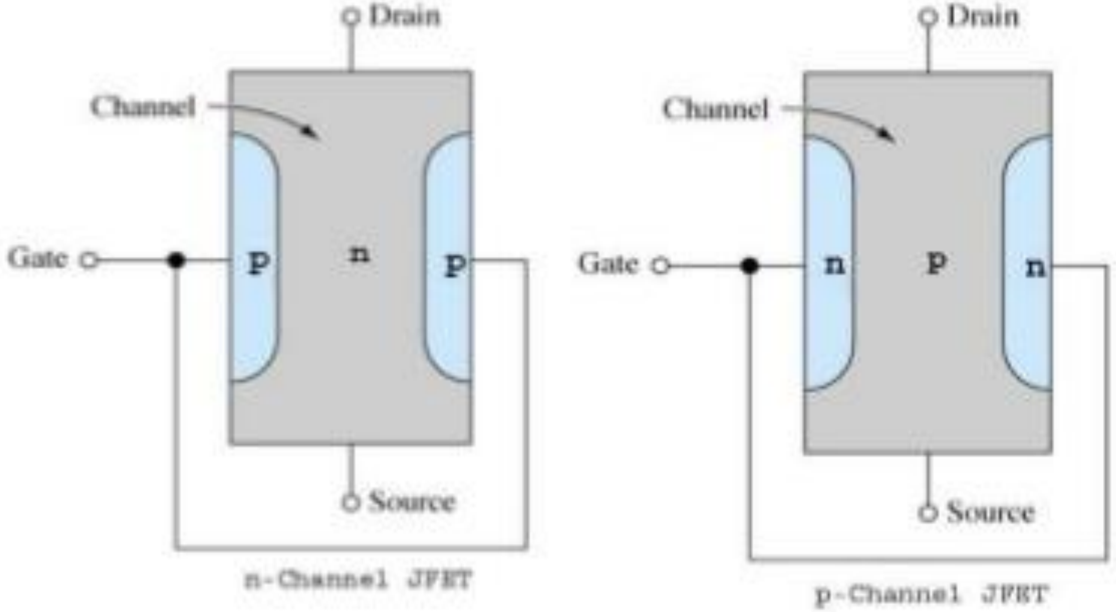

N-channel JFET..

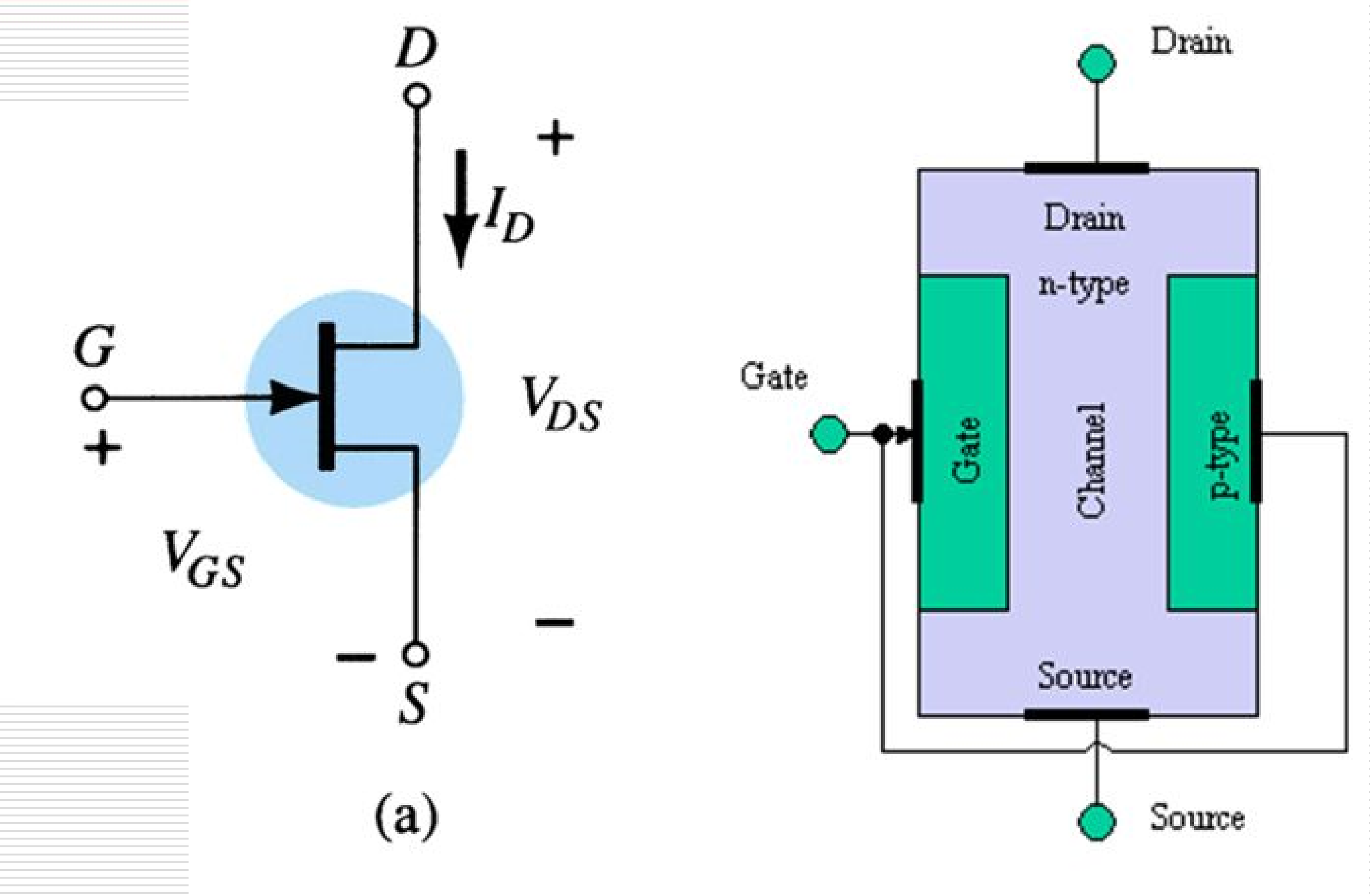

N-channel JFET

- N channel JFET:
  - Major structure is n-type material (channel) between embedded p-type material to form 2 p-n junction.
  - In the normal operation of an n-channel device, the Drain (D) is positive with respect to the Source (S). Current flows into the Drain (D), through the channel, and out of the Source (S)
  - Because the resistance of the channel depends on the gate-to-source voltage (V_{GS}), the drain current (I_D) is controlled by that voltage

P-channel JFET..

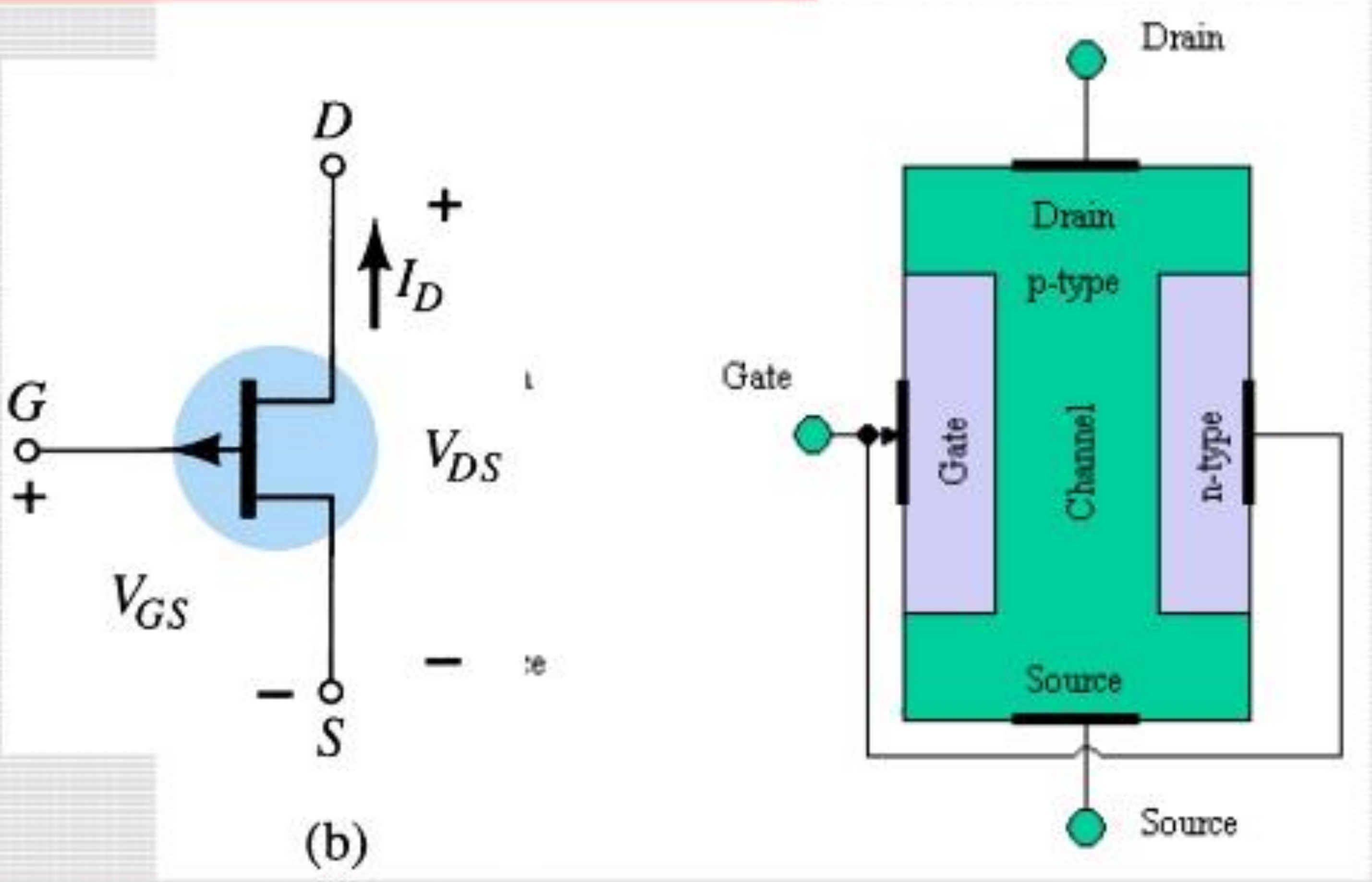

P-channel JFET

- ☐ P channel JFET:
  - Major structure is p-type material (channel) between embedded n-type material to form 2 p-n junction.
  - Current flow : from Source (S) to Drain (D)
  - Holes injected to Source (S) through p-type channel and flowed to Drain (D)

Fig. 22.2

22.3 Working Principle of JFET

Fig. 22.3 shows the circuit of *n*-channel *JFET* with normal polarities. The circuit action is as follows:

(*i*) When a voltage V_{DS} is applied between drain and source terminals and voltage on the gate is zero [See Fig. 22.3 (*i*)], the two *pn* junctions at the sides of the bar establish depletion layers. The electrons will flow from source to drain through a channel between the depletion layers. The size of these layers determines the width of the channel and hence the current conduction through the bar.

(*ii*) When a reverse voltage V_{GS} is applied between the gate and source [See Fig. 22.3 (*ii*)], the width of the depletion layers is increased. This reduces the width of conducting channel, thereby increasing the resistance of *n*-type bar. Consequently, the current from source to drain is decreased. On the other hand, if the reverse voltage on the gate is decreased, the width of the depletion layers also decreases. This increases the width of the conducting channel and hence source to drain current.

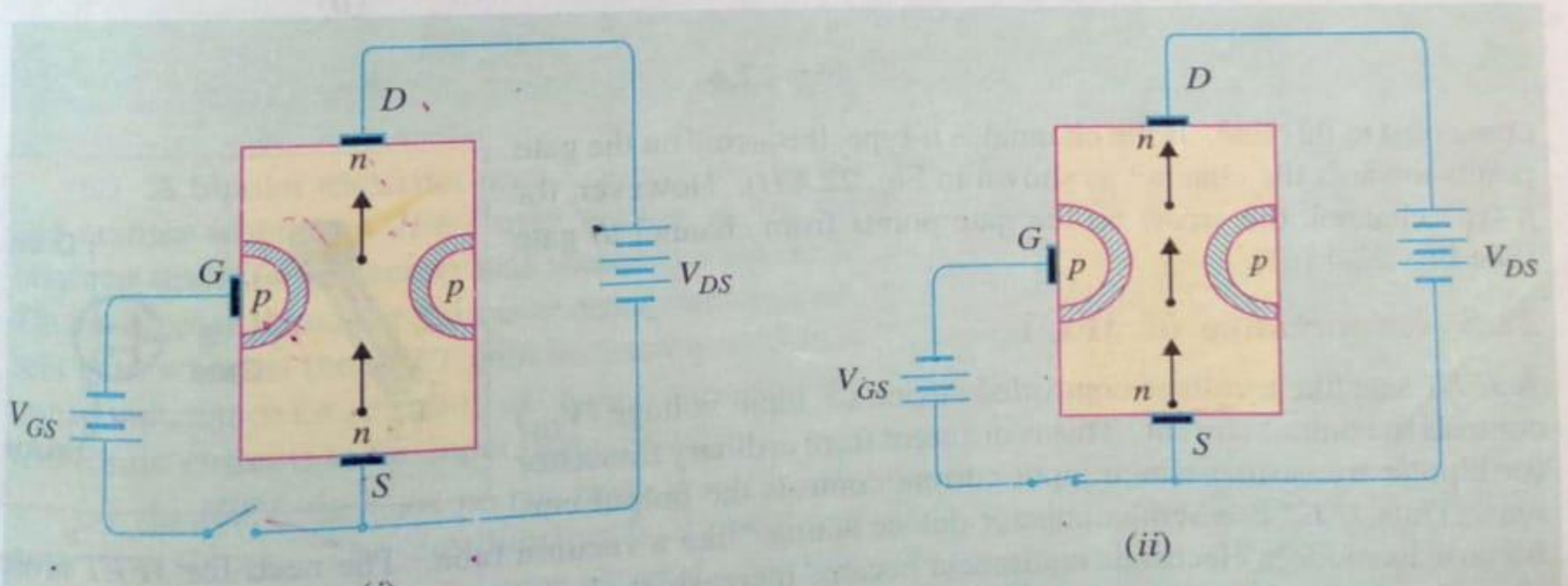

(*ii*)

Pinch-off (V_{GS} = 0 V, V_{DS} = V_P).

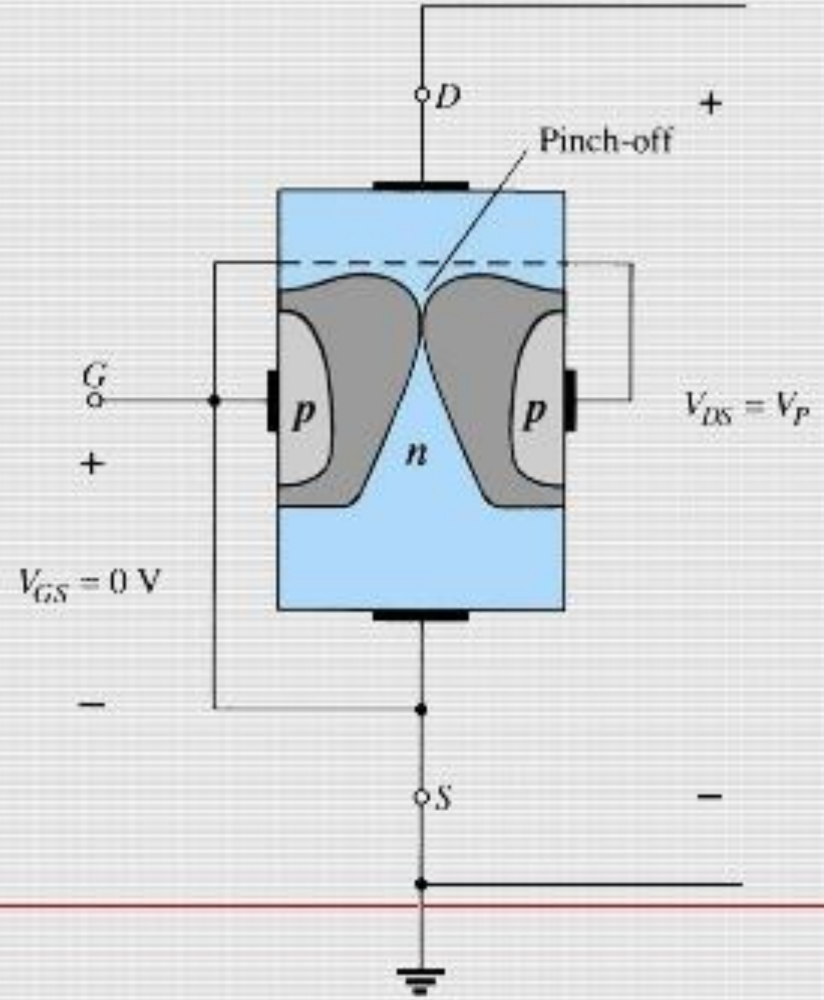

- **JFET output characteristics For Vgs**

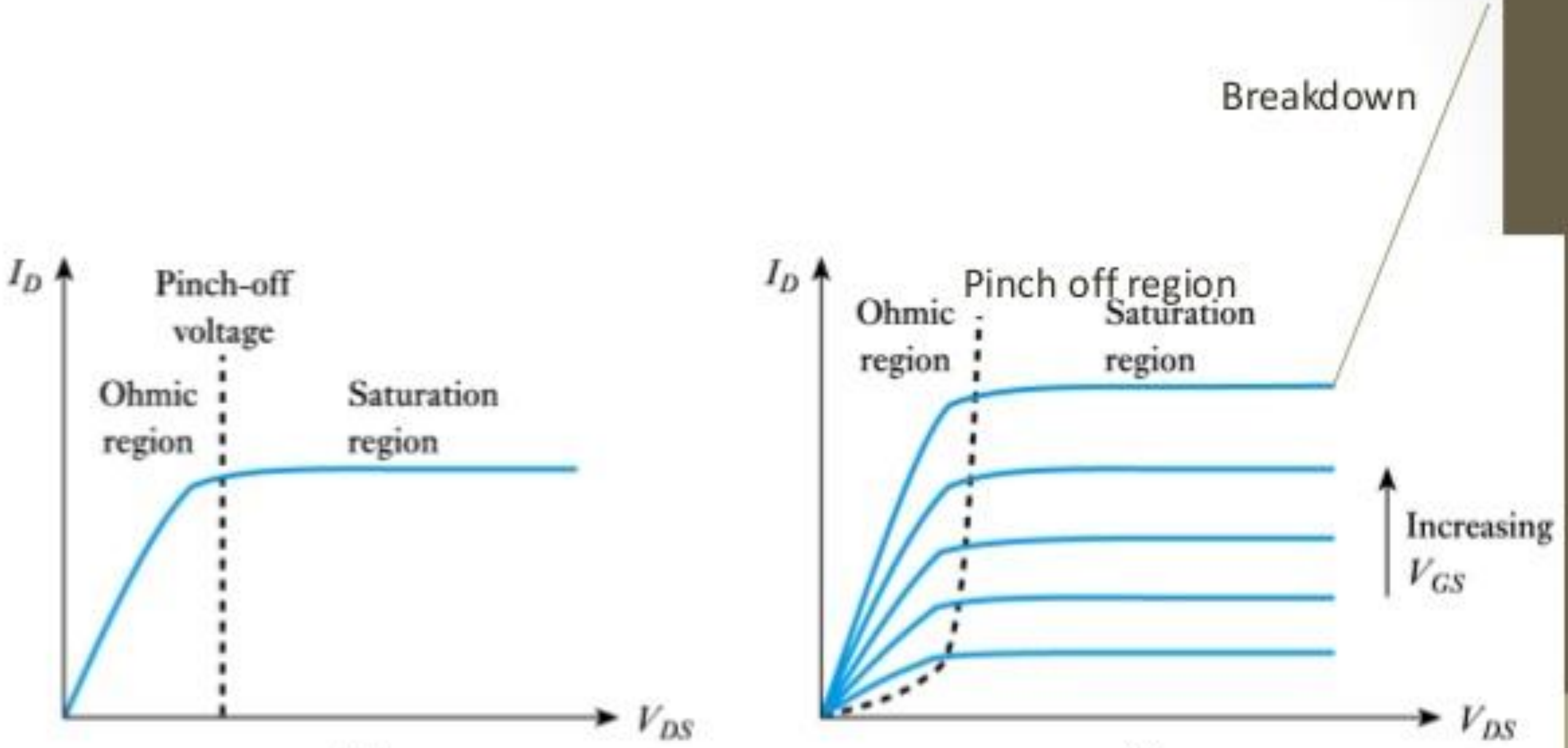

(a) (b)

drain current.
During the negative half-cycle of the signal, the reverse voltage on the gate increases. Consequently, the drain current decreases. The result is that a small change in voltage at the gate produces a large change in drain current. These large variations in drain current produce large output across the load R_L. In this way, *JFET* acts as an amplifier.

22.8 Output Characteristics of JFET

The curve between drain current (I_D) and drain-source voltage (V_{DS}) of a *JFET* at constant gate-source voltage (V_{GS}) is known as *output characteristics of JFET*. Fig. 22.7 shows the circuit for determining the output characteristics of *JFET*. Keeping V_{GS} fixed at some value, say 1V, the drian-source voltage is changed in steps. Corresponding to each value of V_{DS}, the drain current I_D is noted. A plot of these values gives the output characteristic of *JFET* at V_{GS} = 1V. Repeating similar procedure, output characteristics at other gate-source voltages can be drawn. Fig. 22.8 shows a family of output characteristics.

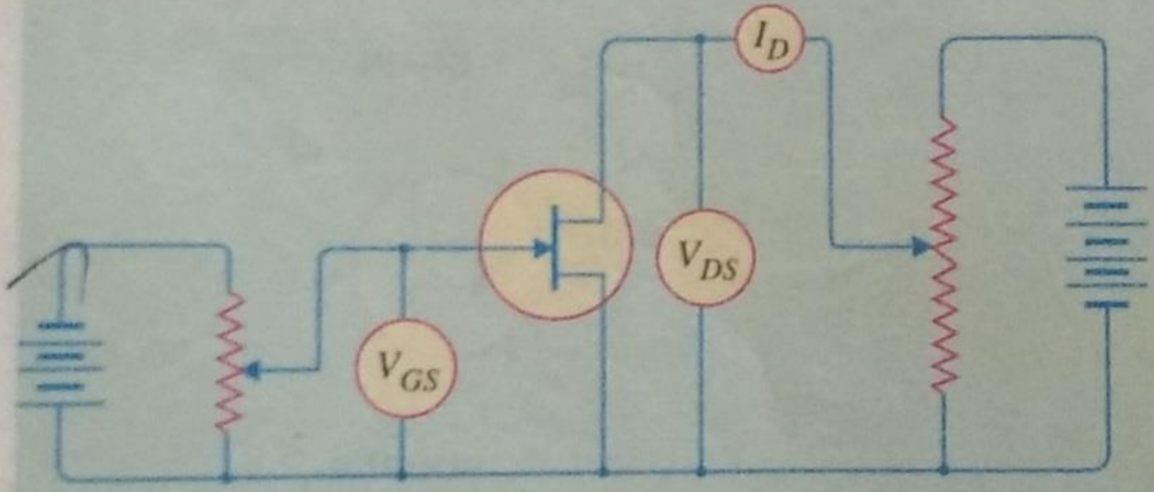

Fig. 22.7

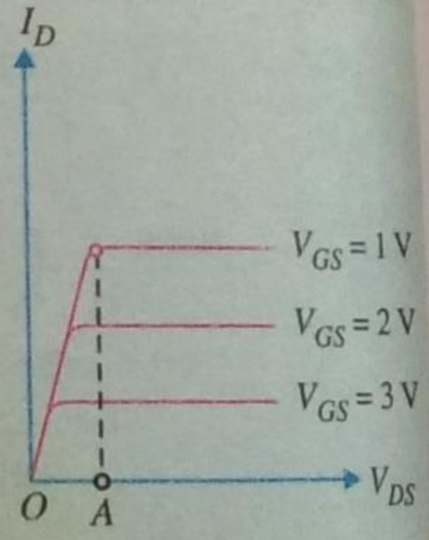

Fig. 22.8

The following points may be noted from the characteristics :

Drain characteristics for an ideal representative N-channel JFET.

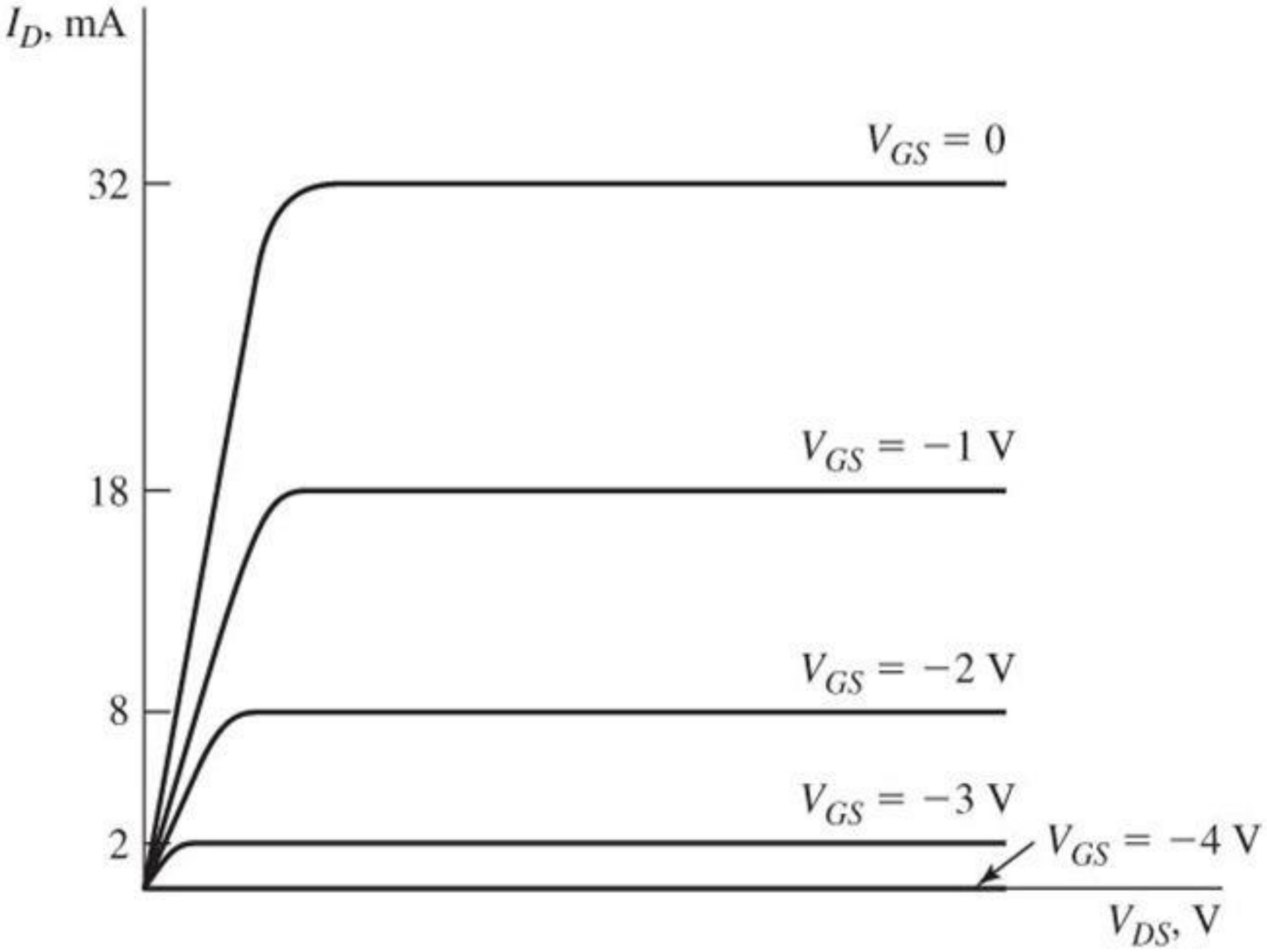

Saturation Level

- After pinch off voltage the drain current become constant, this constant level is known as saturation level .

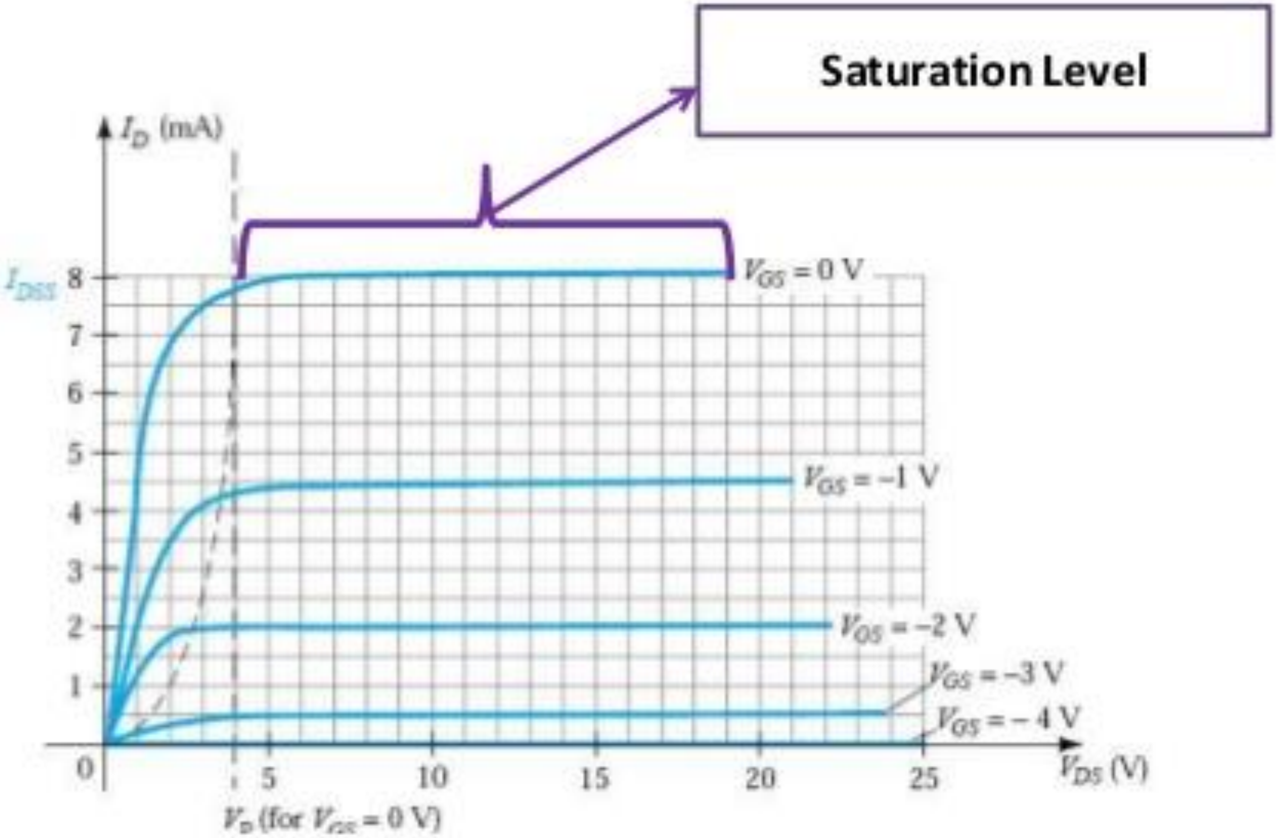

Saturation Level

Break Down Region

- ☐ It is the region, when the drain-source voltage (V_{DS}) is high enough to cause the JFET's resistive channel to breakdown and pass uncontrolled maximum current .

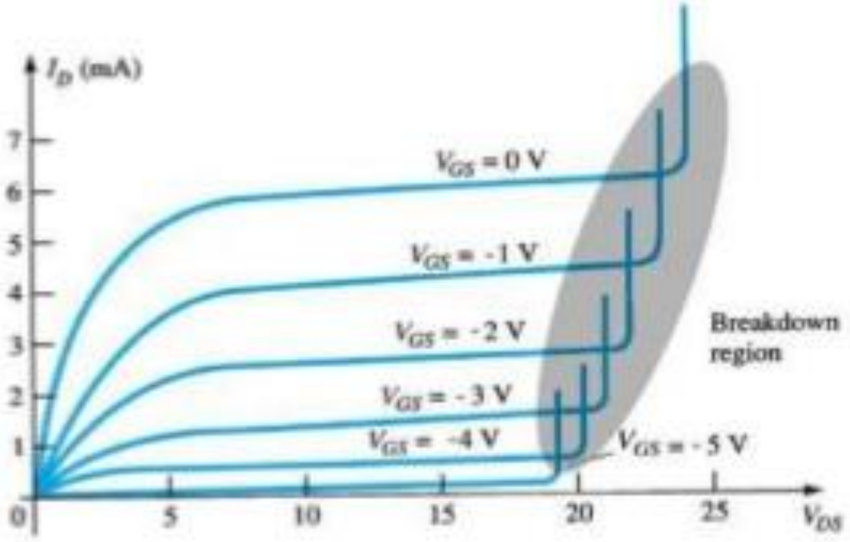

P-Channel JFET Characteristics

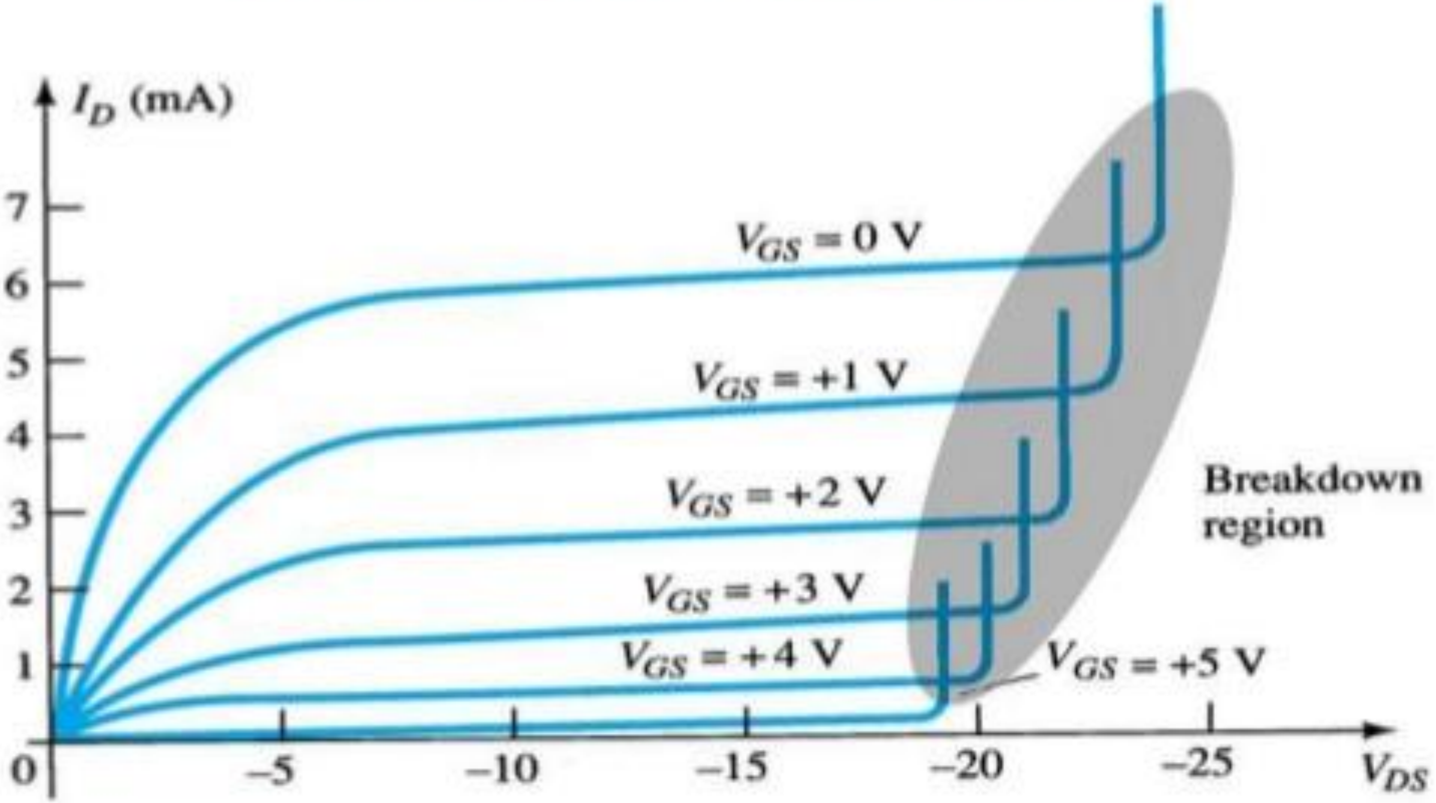

As VGS increases more positively

- the depletion zone increases
- I_D decreases ($I_D < I_{DSS}$)
- eventually $I_D = 0A$

Also note that at high levels of VDS the JFET reaches a breakdown situation. ID increases uncontrollably if $V_{DS} > V_{DSmax}$.

1. Shorted-gate drain current (I_{DSS}). *It is the drain current with source short-circuited to gate (i.e. $V_{GS} = 0$) and drain voltage (V_{DS}) equal to pinch off voltage. It is sometimes called zero-bias current.*

Fig 22.9 shows the *JFET* circuit with $V_{GS} = 0$ *i.e.*, source shorted-circuited to gate. This is normally called shorted-gate condition. Fig. 22.10 shows the graph between I_D and V_{DS} for the shorted gate condition. The drain current rises rapidly at first and then levels off at pinch off voltage V_P. The drain current has now reached the maximum value I_{DSS}. When V_{DS} is increased beyond V_P, the depletion layers expand at the top of the channel. The channel now acts as a current limiter and holds drain current constant at I_{DSS}.

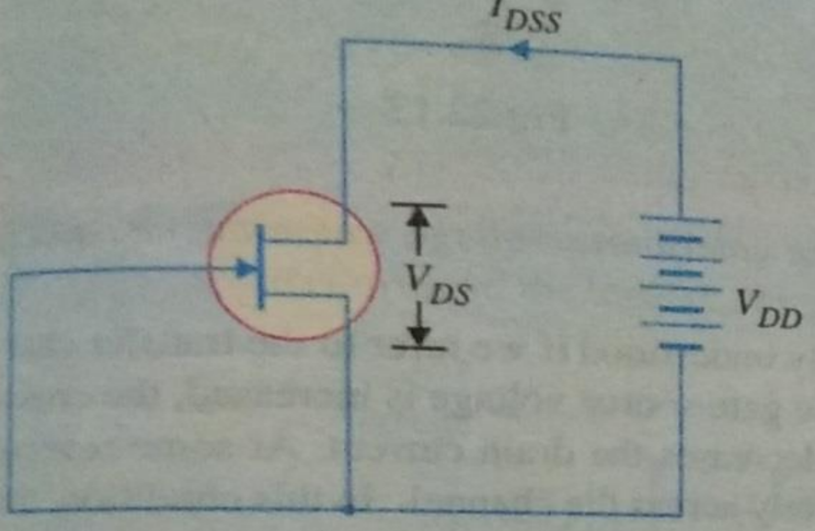

Fig. 22.9

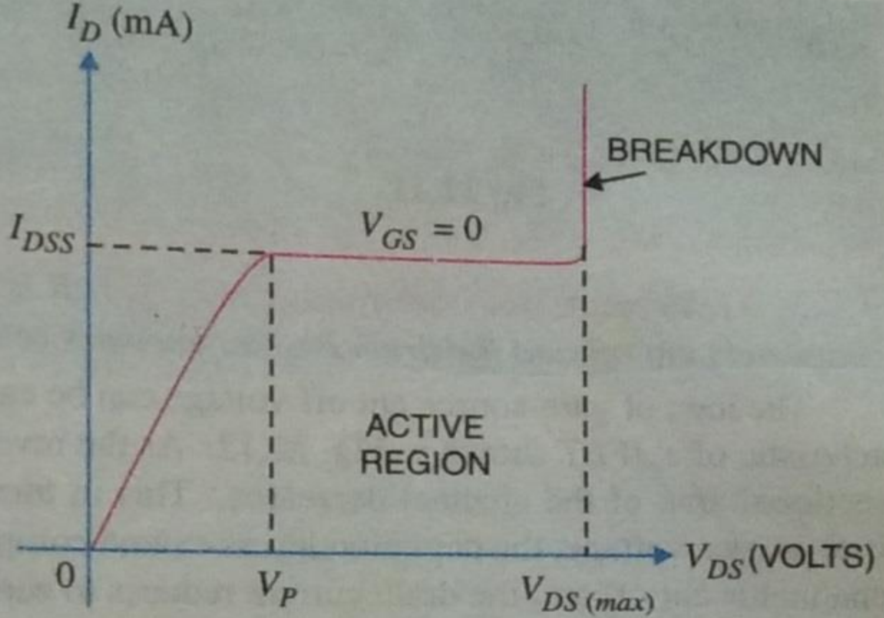

Fig. 22.10

The following points may be noted carefully :

Pinch off Voltage (V_P)

- It is the minimum drain source voltage at which the drain current essentially become constant.

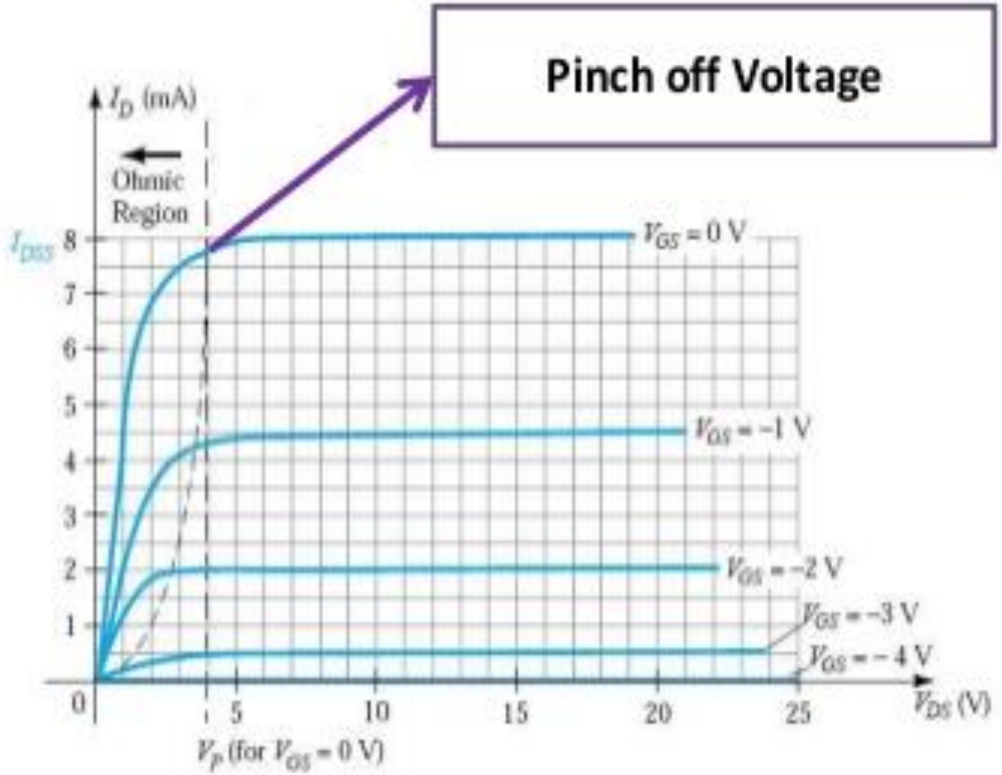

Pinch off Voltage

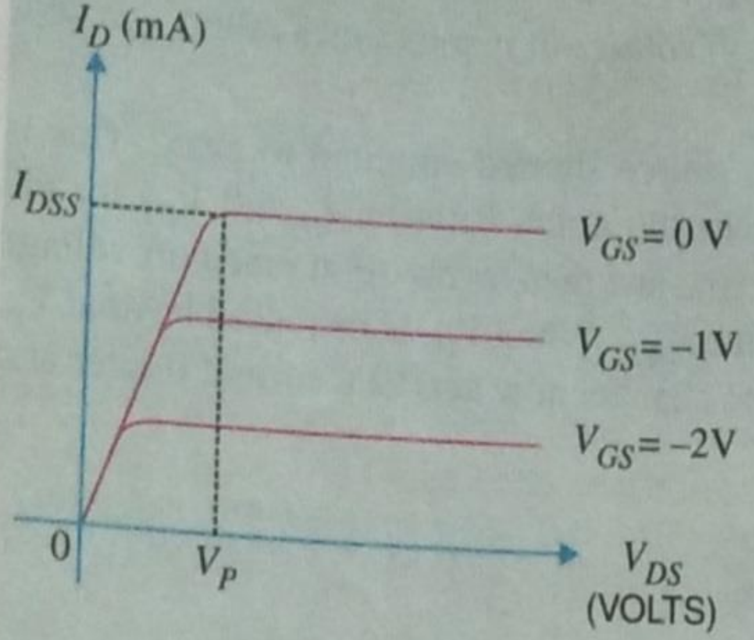

Fig 22.11

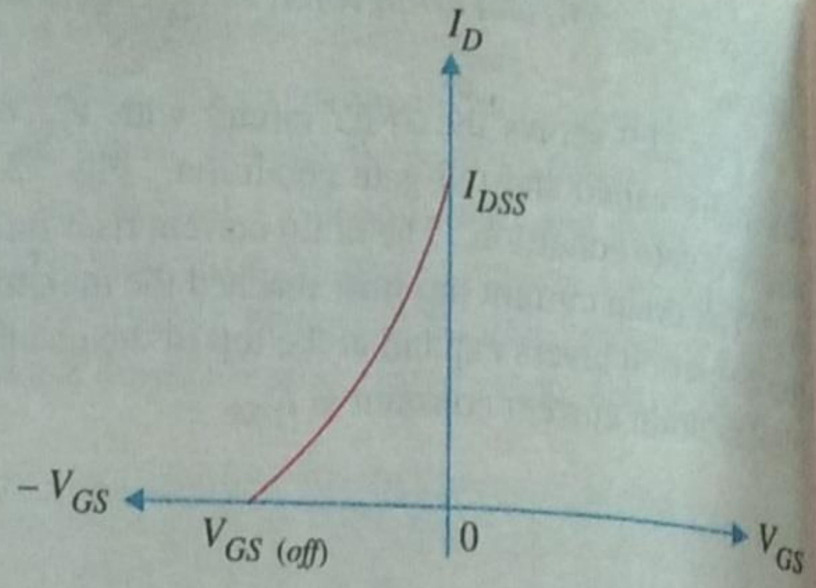

Fig 22.12

3. Gate-source cut off voltage $V_{GS\ (off)}$. *It is the gate-source voltage where the channel is completely cut off and the drain current becomes zero.*

The idea of gate-source cut off voltage can be easily understood if we refer to the transfer characteristic of a *JFET* shown in Fig. 22.12. As the reverse gate-source voltage is increased, the cross-sectional area of the channel decreases. This in turn decreases the drain current. At some reverse gate-source voltage, the depletion layers extend completely across the channel. In this condition, the channel is cut off and the drain current reduces to zero. The gate voltage at which the channel is cut off (*i.e.* channel becomes non-conducting) is called gate-source cut off voltage $V_{GS\ (off)}$.

JFET Parameters

Electrical behavior is described in terms of the parameters of the Device. They are obtained from the characteristics. Important Parameters for FET are

1.DC Drain resistance

2.AC drain Resistance

3.Transconductance

the necessity of using driver stages.

(v) A *JFET* has a smaller size, longer life and high efficiency.

22.12 Parameters of JFET

Like vacuum tubes, a *JFET* has certain parameters which determine its performance in a circuit. The main parameters of a *JFET* are (*i*) a.c. drain resistance (*ii*) transconductance (*iii*) amplification factor.

(*i*) **a.c. drain resistance (r_d).** Corresponding to the a.c. plate resistance, we have a.c. drain resistance in a *JFET*. It may be defined as follows :

It is the ratio of change in drain-source voltage (ΔV_{DS}) to the change in drain current (ΔI_D) at constant gate-source voltage i.e.

$$\text{a.c. drain resistance, } r_d = \frac{\Delta V_{DS}}{\Delta I_D} \text{ at constant } V_{GS}$$

For instance, if a change in drain voltage of 2 V produces a change in drain current of 0.02 mA, then,

$$\text{a.c. drain resistance, } r_d = \frac{2\text{ V}}{0.02\text{ mA}} = 100\text{ k}\Omega$$

Referring to the output characteristics of a *JFET* in Fig. 22.8, it is clear that above the pinch off voltage, the change in I_D is small for a change in V_{DS} because the curve is almost flat. Therefore, drain resistance of a *JFET* has a large value, ranging from 10 kΩ to 1 MΩ.

(*ii*) **Transconductance (g_{fs}).** The control that the gate voltage has over the drain current is measured by transconductance g_{fs} and is similar to the transconductance g_m of the tube. It may be defined as follows :

It is the ratio of change in drain current

Referring to the output characteristics of a *JFET* in Fig. 22.8, it is clear that above the pinch off voltage, the change in I_D is small for a change in V_{DS} because the curve is almost flat. Therefore, drain resistance of a *JFET* has a large value, ranging from 10 kΩ to 1 MΩ.

(ii) **Transconductance (g_{fs}).** The control that the gate voltage has over the drain current is measured by transconductance g_{fs} and is similar to the transconductance g_m of the tube. It may be defined as follows :

It is the ratio of change in drain current (ΔI_D) to the change in gate-source voltage (ΔV_{GS}) at constant drain-source voltage i.e.

$$\text{Transconductance, } g_{fs} = \frac{\Delta I_D}{\Delta V_{GS}} \text{ at constant } V_{DS}$$

The transconductance of a *JFET* is usually expressed either in mA/volt or micromho. As an example, if a change in gate voltage of 0.1 V causes a change in drain current of 0.3 mA, then,

$$\text{Transconductance, } g_{fs} = \frac{0.3\text{ mA}}{0.1\text{ V}} = 3\text{ mA/V} = 3 \times 10^{-3}\text{ A/V or mho}$$

$$= 3 \times 10^{-3} \times 10^{6}\ \mu\text{ mho} = 3000\ \mu\text{ mho}$$

(iii) **Amplification factor (μ).** *It is the ratio of change in drain-source voltage (ΔV_{DS}) to the change in gate-source voltage (ΔV_{GS}) at constant drain current i.e.*

$$\text{Amplification factor, } \mu = \frac{\Delta V_{DS}}{\Delta V_{GS}} \text{ at constant } I_D$$

Features of JFET

- JFET is a voltage controlled device i.e. input voltage (V_{GS}) control the output current (I_D).
- In JFETs, the width of a junction is used to control the effective cross-sectional area of the channel through which current conducts.
- It is always operated with Gate-Source p-n junction in reverse bias.
- Because of reverse bias it has high input impedance.
- In JFET the gate current is zero i.e. $I_G=0$.

Advantages

- It is simpler to fabricate, smaller in size.
- It has longer life and higher efficiency.
- It has high input impedance.
- It has negative temperature coefficient of resistance .
- It has high power gain.

Application of JFET

- Voltage controlled resistor
- Analog switch or gate
- Act as an amplifier
- Low-noise amplifier
- Constant current source

JFET		BJT
1.	Unipolar device (current conduction is only due to one type of majority carrier either electron or hole).	Bipolar device (current condition, by both types of carriers, i.e., majority and minority-electrons and holes)
2.	The operation depends on the control of a junction depletion width under reverse bias.	The operation depends on the injection of minority carriers across a forward biased junction.
3.	Voltage driven device. The current through the two terminals is controlled by a voltage at the third terminal (gate).	Current driven device. The current through the two terminals is controlled by a current at the third terminal (base).
4.	Low noise level.	High noise level.
5.	High input impedance (due to reverse bias).	Low input impedance (due to forward bias).
6.	Gain is characterised by transconductance.	Gain is characterized by voltage gain.
7.	Better thermal stability.	Less thermal stability.


Thank You !

LASER

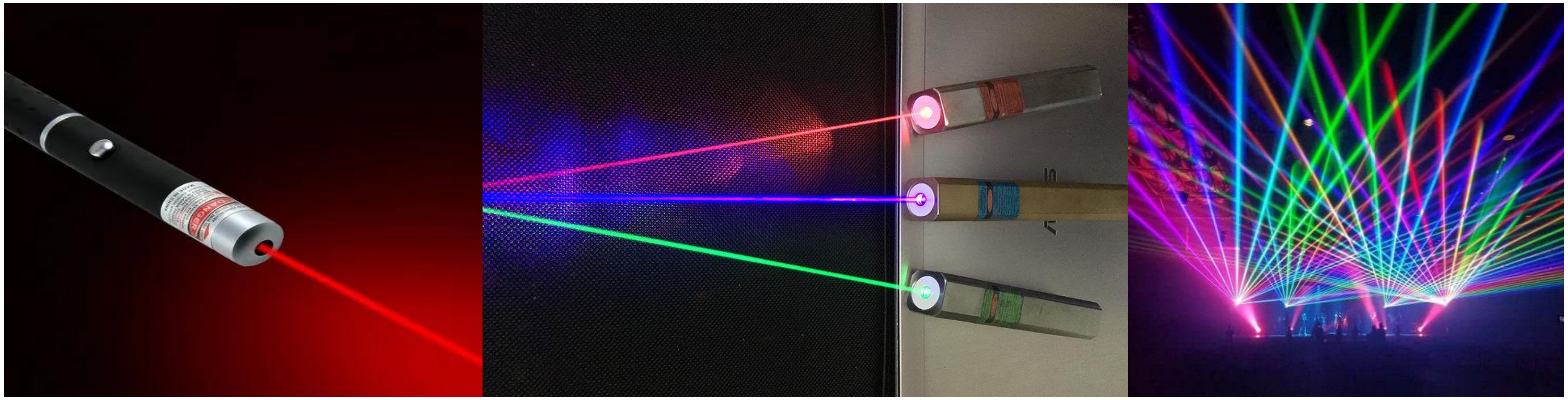

Ms. R.GOWTHAR

Assistant Professor

Department of physics

Jamal Mohamed College

Trichy-20

LASER

LASER stands for '*Light Amplification by Stimulated Emission of Radiation*'

Laser is a very intense, concentrated, highly parallel and monochromatic beam of light.

Coherence is very important property of Laser.

Incoherent Light:

The light emitted from the Sun or other ordinary light sources such as tungsten filament and fluorescent tube lights is spread over a wide range of frequencies.

For eg. Sunlight is spread over Infra Red, Visible light and Ultra Violet spectrum. So, the amount of energy available at a particular frequency is very less and hence less intense.

Such light is irregular and mixed of different frequencies, directions and durations, and is incoherent.

Incoherent light is due to spontaneous and random emission of photons by the atoms in excited state. These photons will not be in phase with each other.

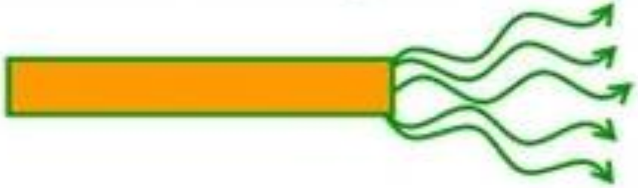

Incoherent Light

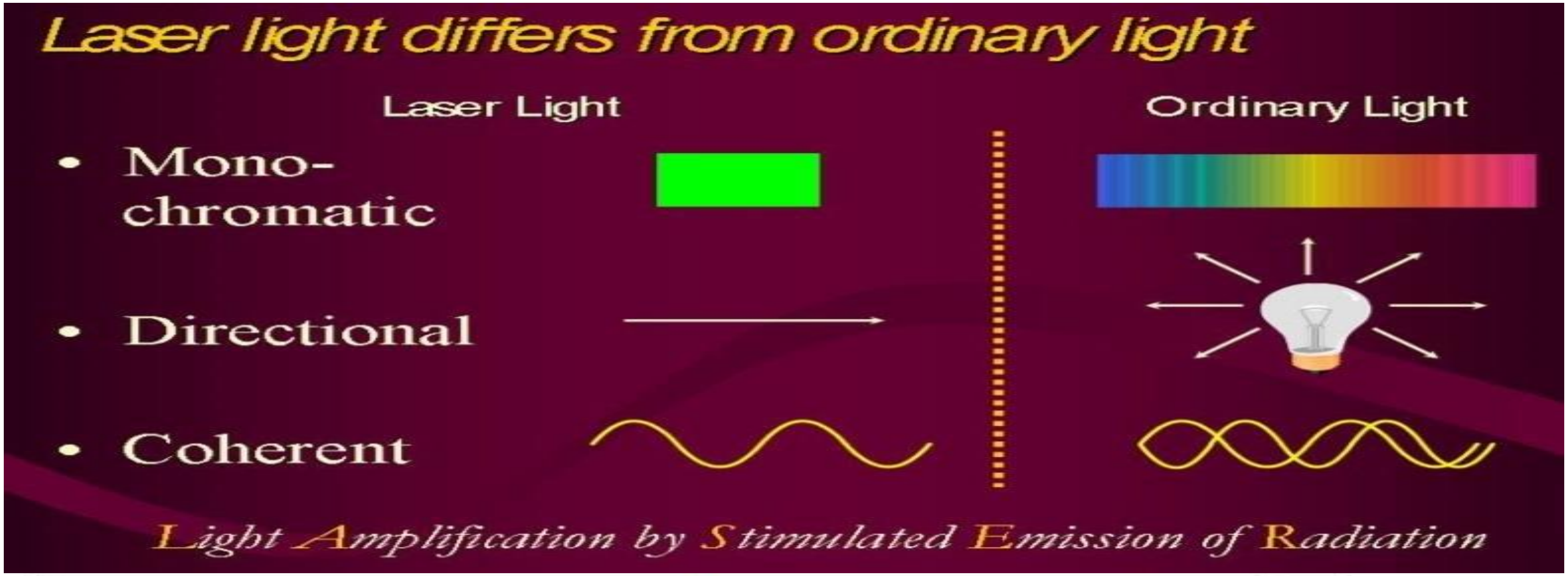

Laser light differs from ordinary light

Laser Light

Ordinary Light

- Mono-chromatic
- Directional
- Coherent

Light Amplification by Stimulated Emission of Radiation

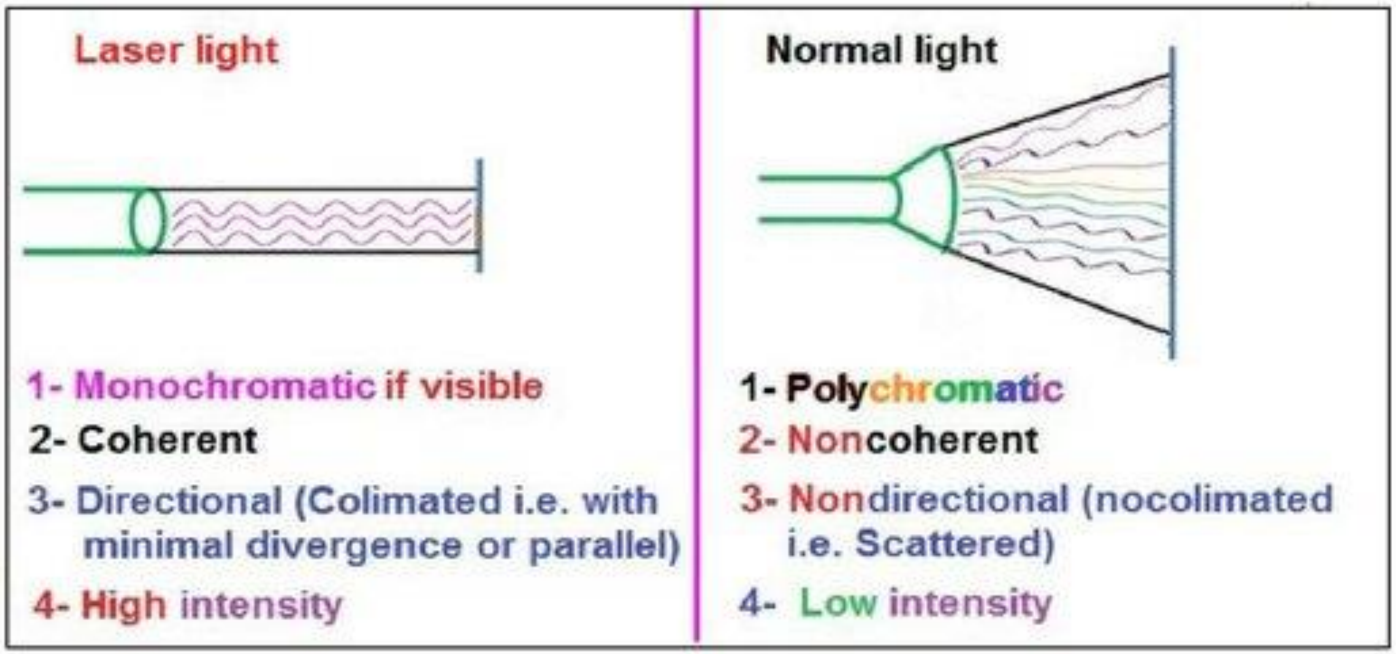

Laser light

1- Monochromatic if visible

2- Coherent

3- Directional (Colimated i.e. with minimal divergence or parallel)

4- High intensity

Normal light

1- Polychromatic

2- Noncoherent

3- Nondirectional (nocolimated i.e. Scattered)

4- Low intensity

Stimulated Emission Explained

absorption

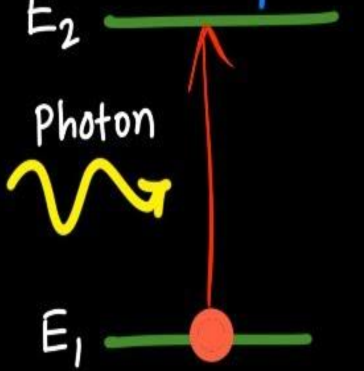

Spontaneous emission

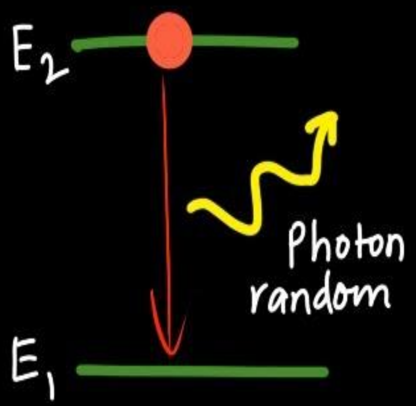

Stimulated emission

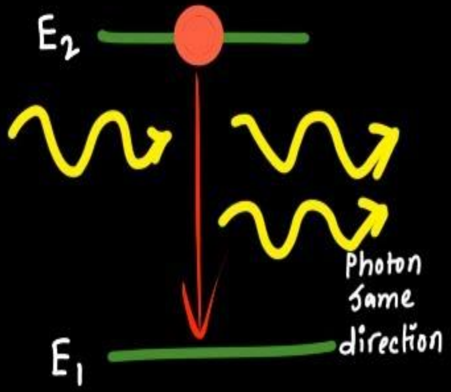

Absorption of radiation or light

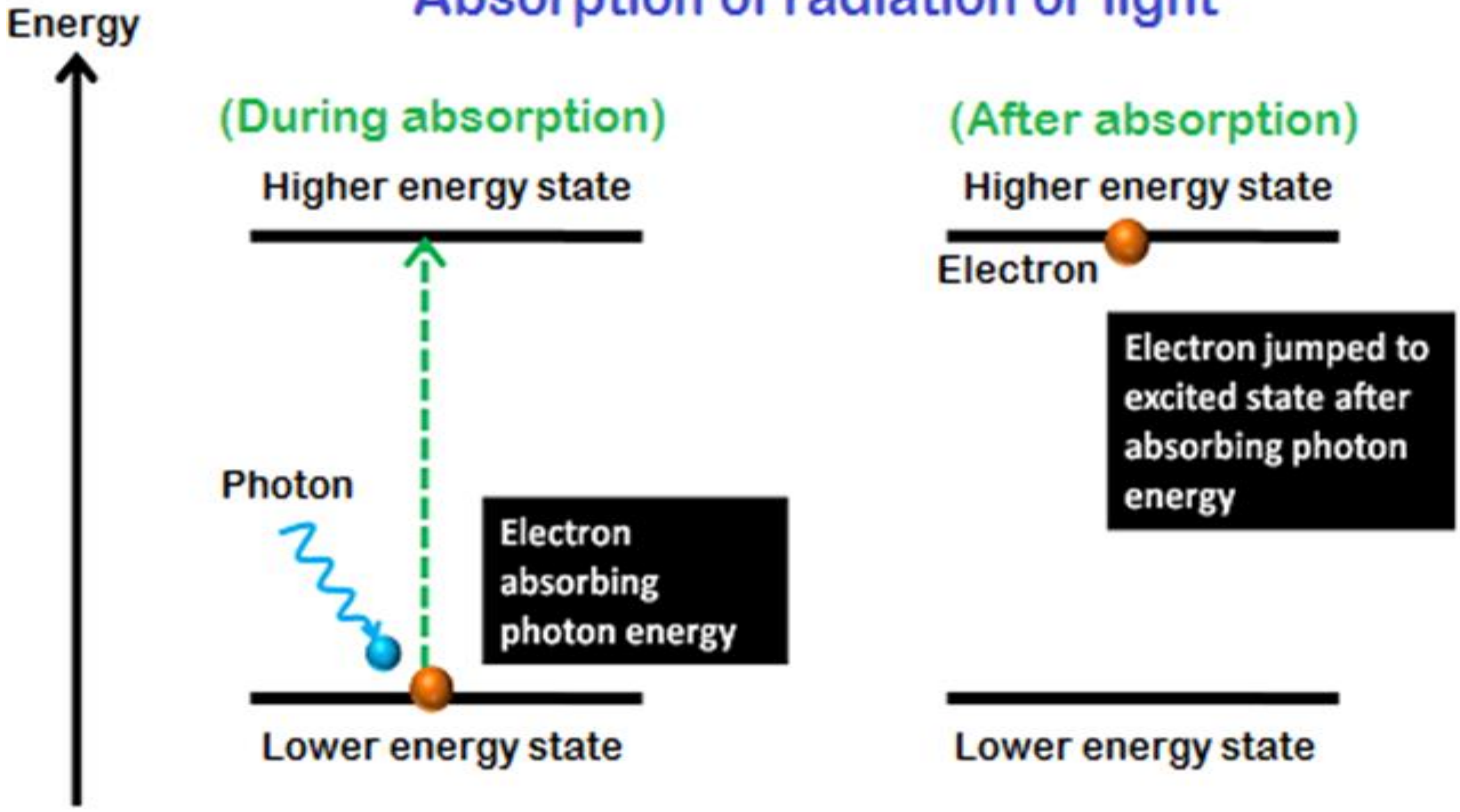

Energy

(During absorption)

Higher energy state

Photon

Electron absorbing photon energy

Lower energy state

(After absorption)

Higher energy state

Electron

Electron jumped to excited state after absorbing photon energy

Lower energy state

Physics and Radio-Electronics

Spontaneous emission

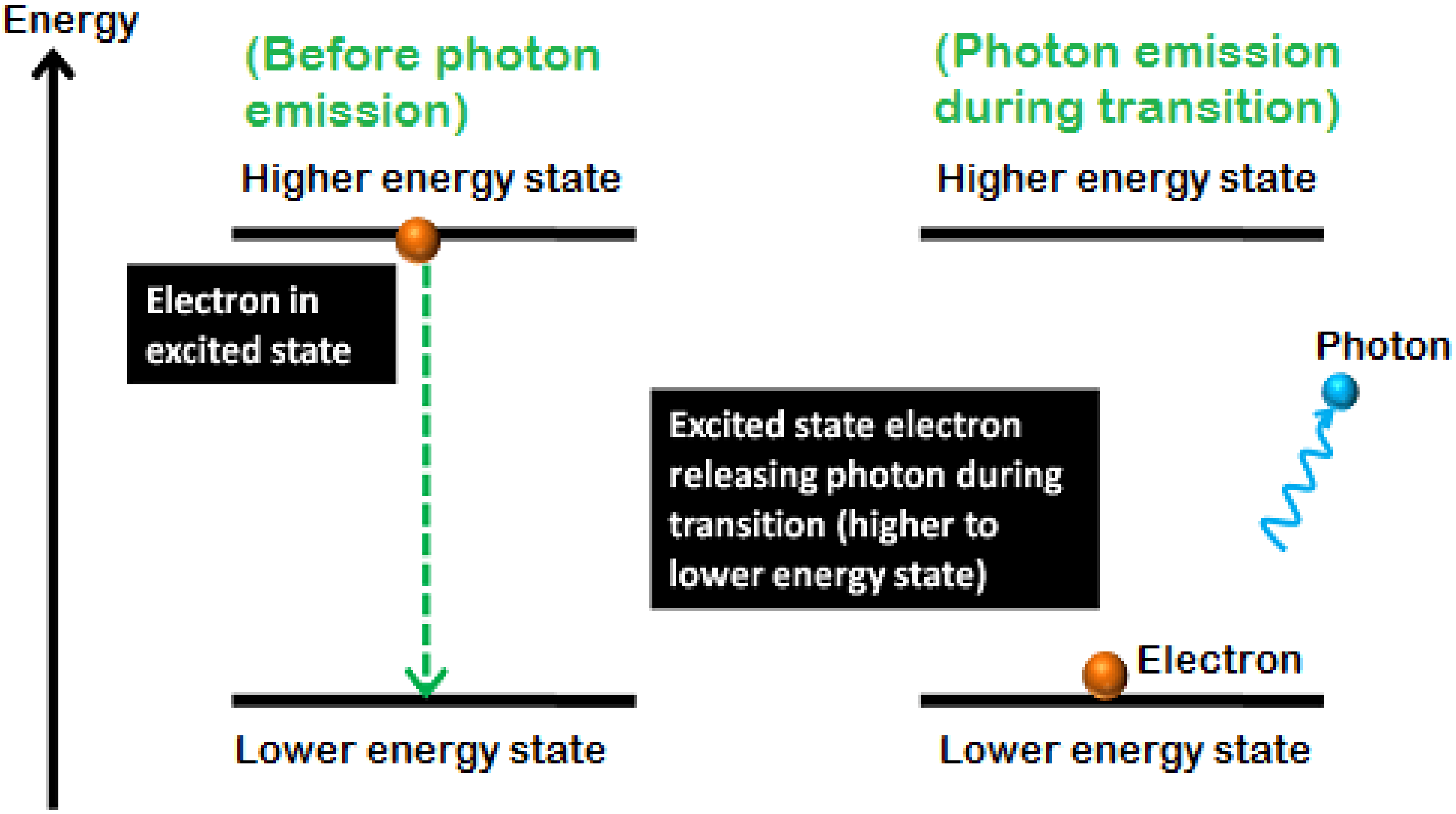

Energy

(Before photon emission)

Higher energy state

Electron in excited state

Lower energy state

(Photon emission during transition)

Higher energy state

Photon

Excited state electron releasing photon during transition (higher to lower energy state)

Electron

Lower energy state

Physics and Radio-Electronics

Stimulated emission

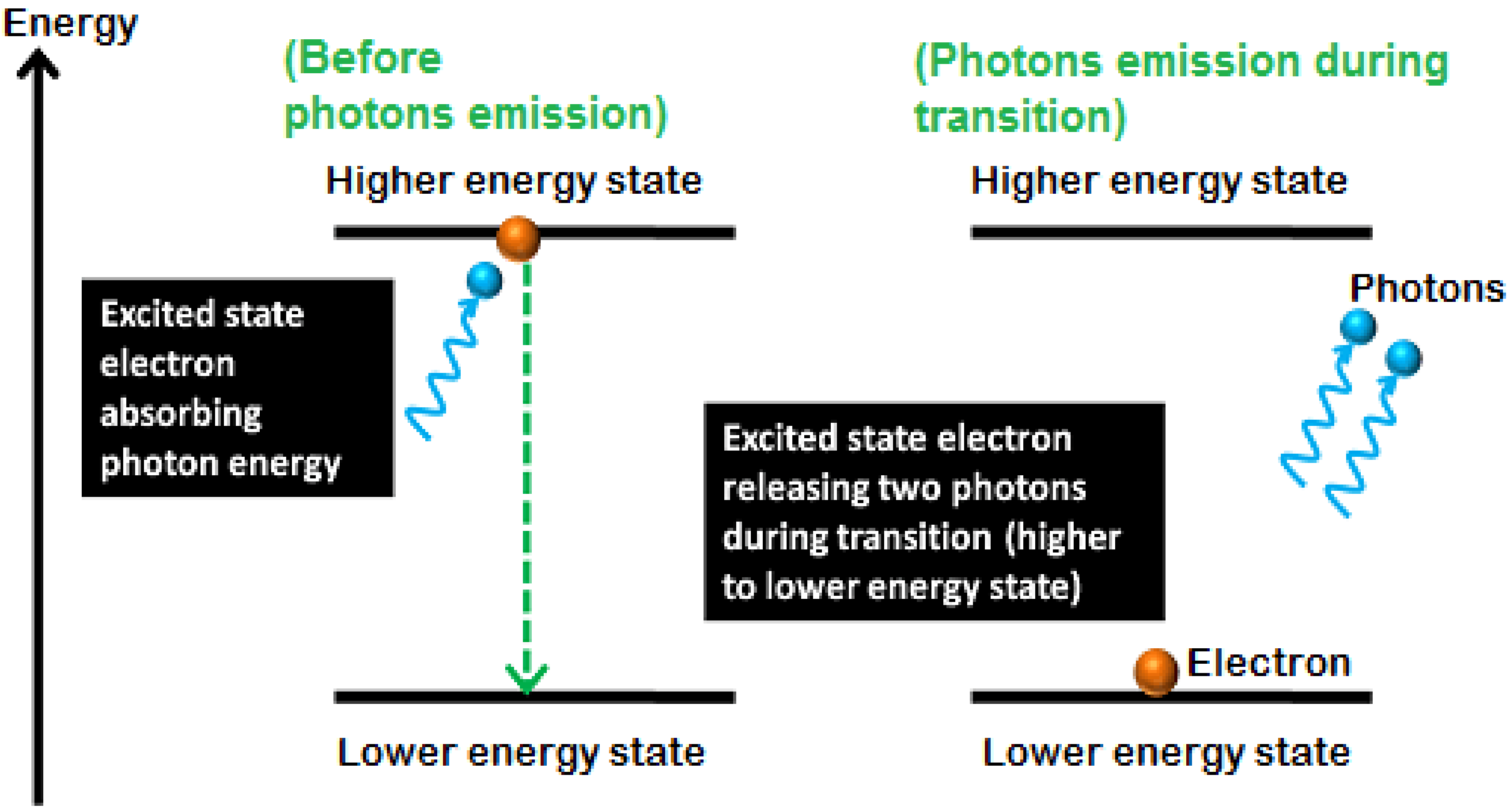

Physics and Radio-Electronics

Population inversion

- For light amplification by stimulated emission of radiation the population of excited state must be greater than the population of lower energy state. This condition is called population inversion.

Metastable states

Normally an electron in an excited state will make the transition to a lower state in a time of 10^{-7}s. In contrast an electron may stay in a metastable state for 10^{-3}s.

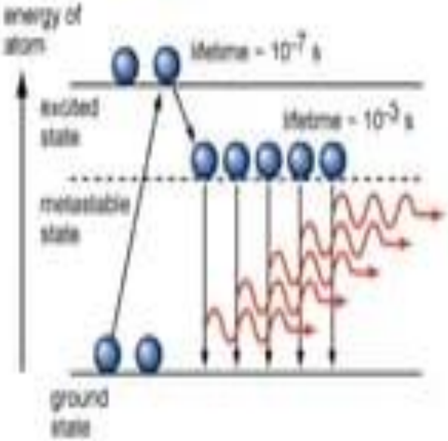

Metastable states

To achieve population inversion we must have metastable states. These are excited states where electrons stay for unusually long times.

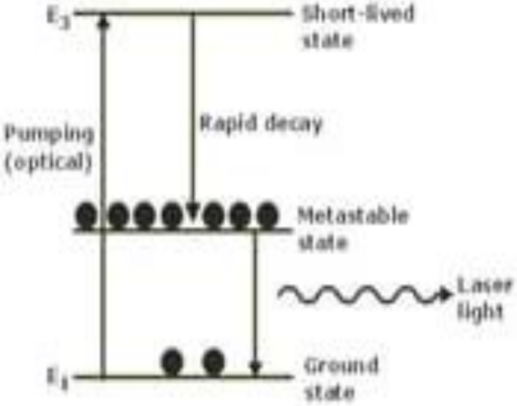

- **Laser Pumping:**
- The process to achieve the population inversion in the medium is called Pumping action. It is essential requirement for producing a laser beam.
- **Methods of pumping action**

The methods commonly used for pumping action are:

- **1. Optical pumping (Excitation by Photons)**
- **2. Electrical discharge method (Excitation by electrons)**
- **3. Direct conversion**
- **4. In elastic atom – atom collision between atoms**

DIFFERENT PUMPING MECHANISMS :

i. ***Optical pumping :*** Exposure to electromagnetic radiation of frequency $\upsilon = (E_2 - E_1)/h$ obtained from discharge flash tube results in pumping Suitable for solid state lasers.

ii. ***Electrical discharge :*** By inelastic atom-atom collisions, population inversion is established.

Suitable for Gas lasers

iii. ***Chemical pumping :*** By suitable chemical reaction in the active medium, population of excited state is made higher compared to that of ground state Suitable for liquid lasers.

iv. ***Optical resonator :*** A pair of mirrors placed on either side of the active medium is known as optical resonator. One mirror is completely silvered and the other is partially silvered. The laser beam comes out through the partially silvered mirror.

Laser Applications

Laser Applications

Daily Applications

- Compact disk
- Laser printer
- Optical disc drives
- Optical computer
- Bar code scanner
- Holograms against forgery
- Fiber optic communications
- Free space communications
- Laser shows
- Holograms
- Kinetic sculptures

Medical Applications

- Surgery:
  - Eyes
  - General
  - Dentistry
  - Dermatology
- Diagnostic Fluorescence
- Soft Laser

Scientific Applications

- Basic Scientific Research
- Spectroscopy
- Nuclear Fusion
- Cooling Atoms
- Short Pulses, Study of Fast Processes

Industrial Applications

- Measurements
- Straight Lines
- Material Processing
- Spectral Analysis

Military Applications

- Laser range-finder
- Target designation
- Laser weapons
- Laser blinding

Special Applications

- Energy Transpor
- Laser Gyroscope
- Fiber Lasers

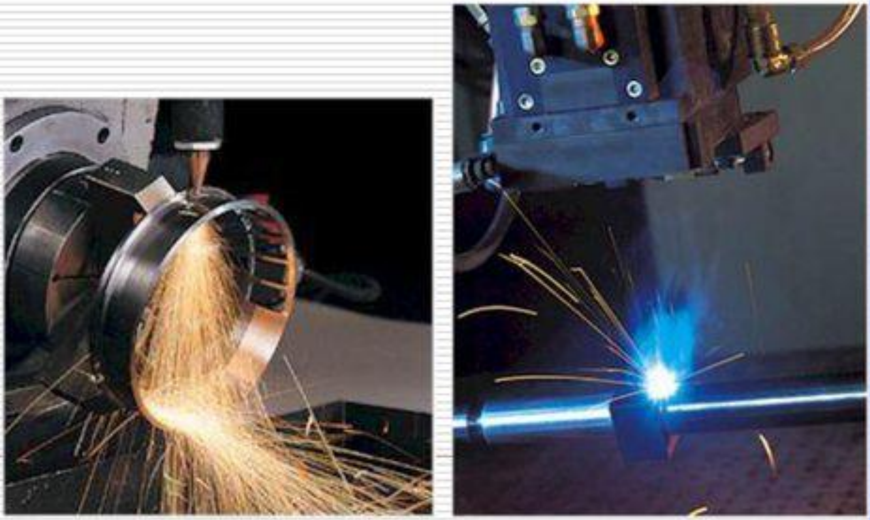

Thank You

TRANSISTORS

“The building blocks of electronics world”

Ms. R.GOWTHAR
Assistant Professor
Department of physics
Jamal Mohamed College
Trichy-20

What is a transistor?

- A transistor is a 3 terminal electronic device made of semiconductor material.
- Transistors have many uses, including amplification, switching, voltage regulation, and the modulation of signals

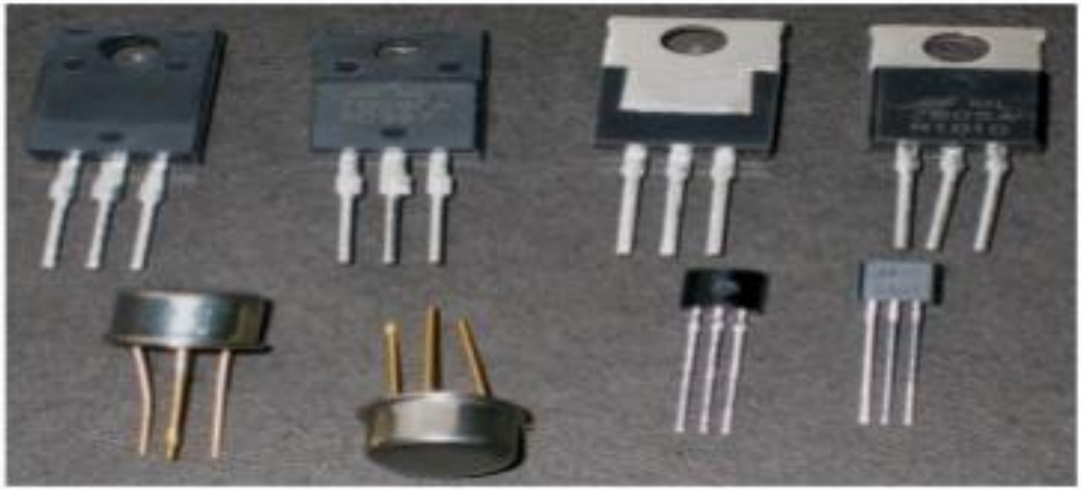

- ***When a third doped element is added to a crystal diode in such a way that two pn junctions are formed the resulting device is known as 'TRANSISTOR'***

- ***TRANSISTORS are far smaller than vaccum tubes, it have no filament and hence need no heating power and may be operated in any position.***

- ***Transistor has now become the 'Heart of the most electronic applications'.***

- ***A transistor consists of 2 pn junction formed by sandwitching either p -type (or) n- type semiconductor between a pair of opposites sides.***

- ***A transistor has two pn junction diodes. One junction is forward biased. Other junction is reversed junction.***

- ***The forward biased has low resistance path whereas a reverse biased junction has high resistance path.***

- A ‘TRANSISTOR’ transfers a signal from a low resistance to high resistance.

- ‘Trans’ means the signal transfer property of the device

- while ‘istor’ means classifies it as a solid elementin the same general family with resistors

- **Transfer + Resistors = TRANSISTOR**

Transistor operation

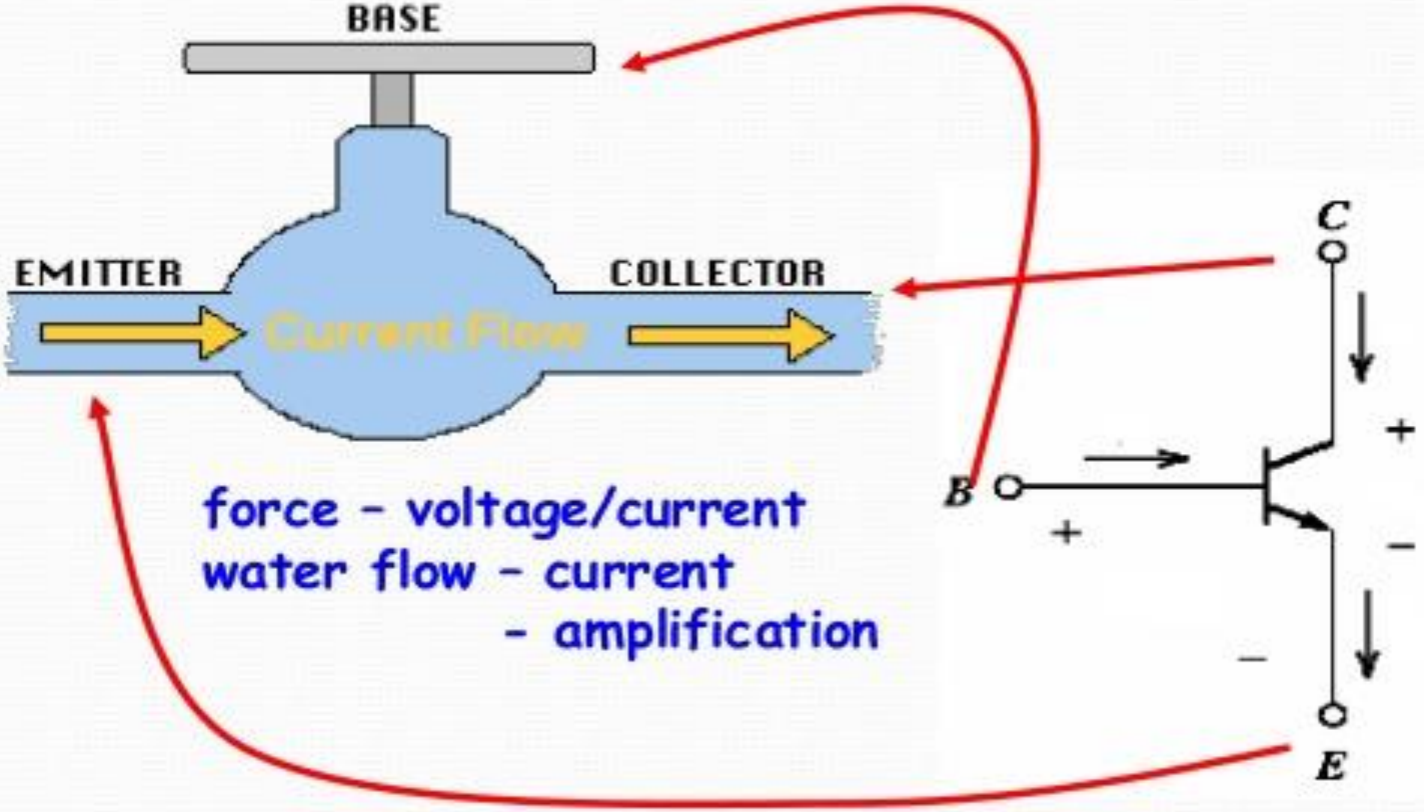

force – voltage/current
water flow – current
- amplification

Introduction

- A transistor is a device that can be used as either an amplifier or a switch. Transistor is current controlling device.

Transistors can be either **npn** or pnp type.

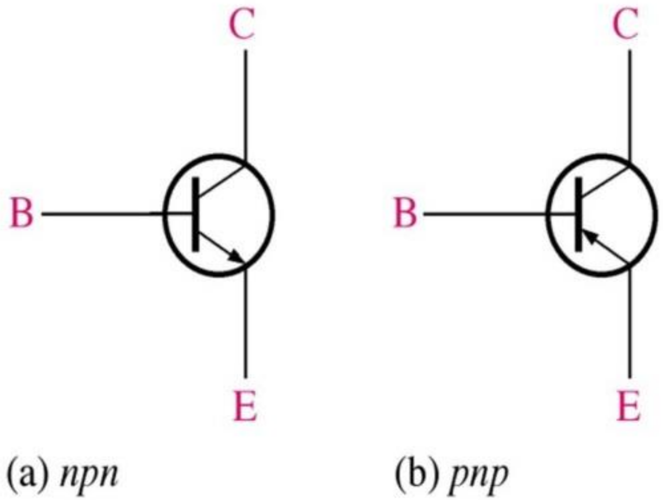

(a) *npn* (b) *pnp*

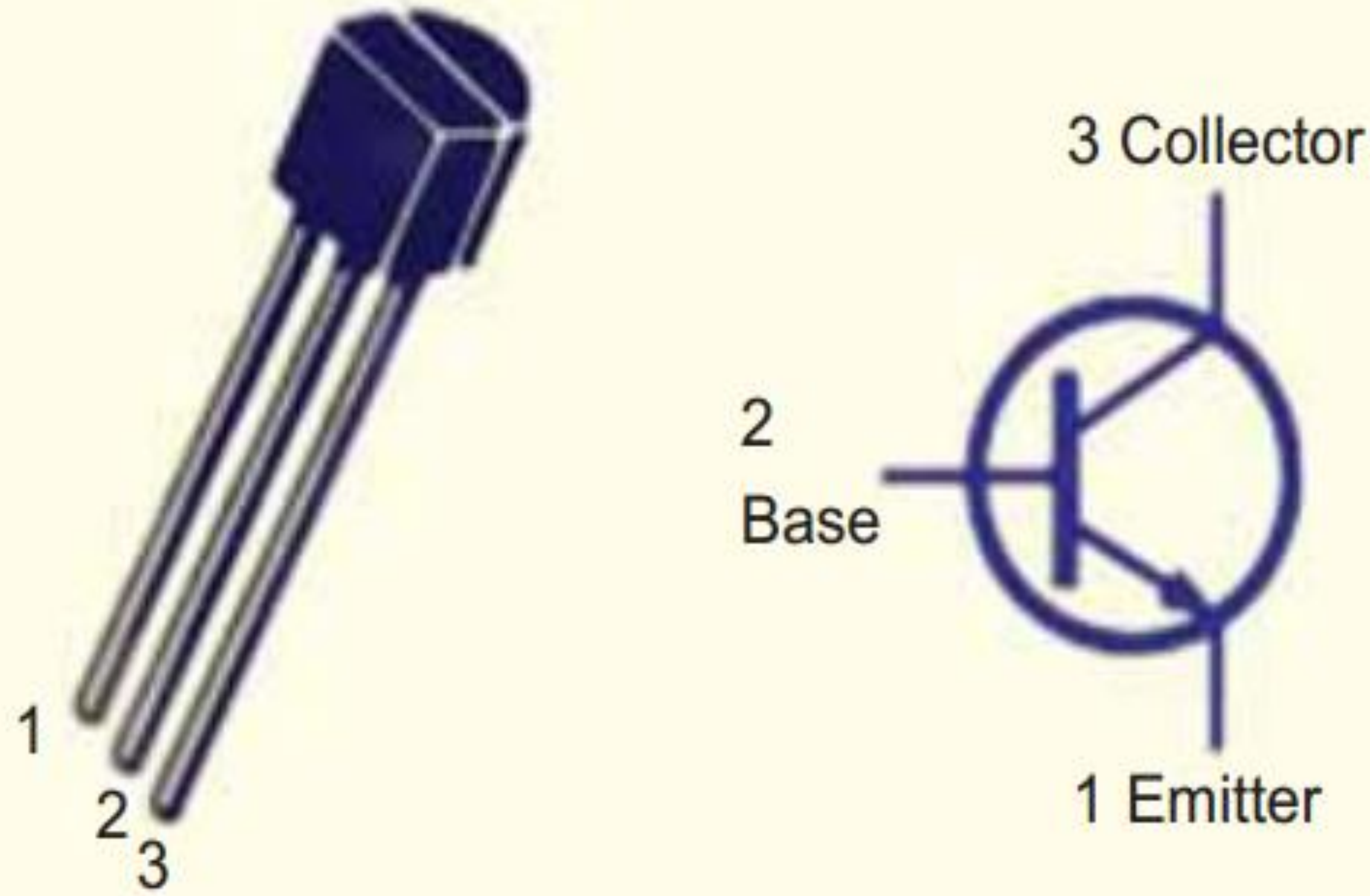
1
2
3
3 Collector
2
Base
1 Emitter

Transistor Definition

- Transistor is an electronic device made of three layers of semiconductor material that can act as an insulator and a conductor.

- The three layered transistor is also known as the bipolar junction transistor.

- ***PNP Transistor Definition:***

The ***transistor*** *in which one n-type material is doped with two p-type materials such type of* ***transistor*** *is known as ’’****PNP transistor”****.*

- *It is a current controlled device.*

- *The small amount of base current controlled both the emitter and collector current.*

11.5 Transistor Symbols

In the earlier diagrams, the transistors have been shown in diagrammatic form. However, for the sake of convenience, the transistors are represented by schematic diagrams. The symbols used for *npn* and *pnp* transistors are shown in Fig. 11.6.

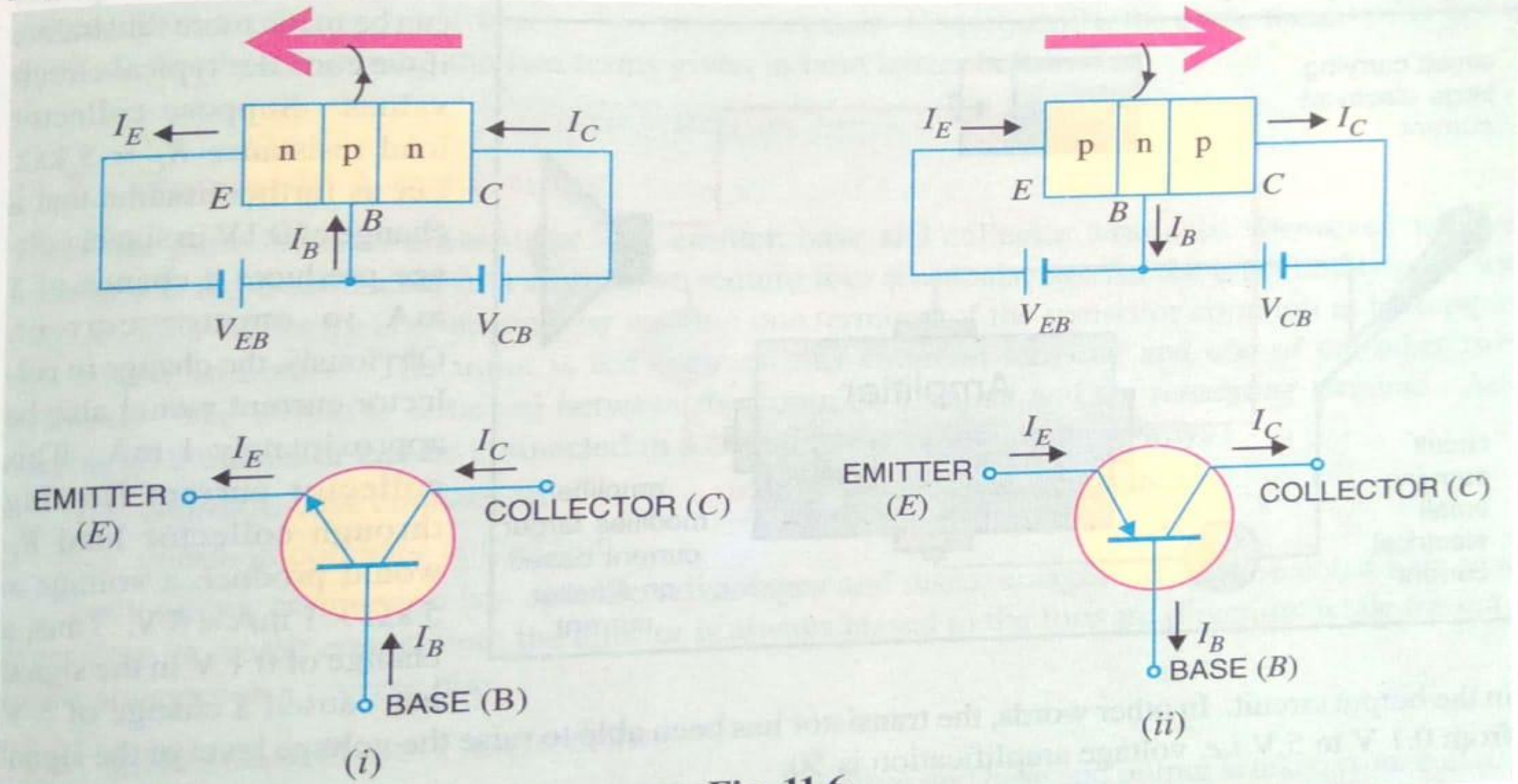

Fig. 11.6

Note that emitter is shown by an arrow which indicates the direction of conventional current flow with forward bias. For *npn* connection, it is clear that conventional current flows out of the emitter as indicated by the outgoing arrow in Fig. 11.6 (*i*). Similarly, for *pnp* connection, the conventional current flows into the emitter as indicated by inward arrow in Fig. 11.6 (*ii*).

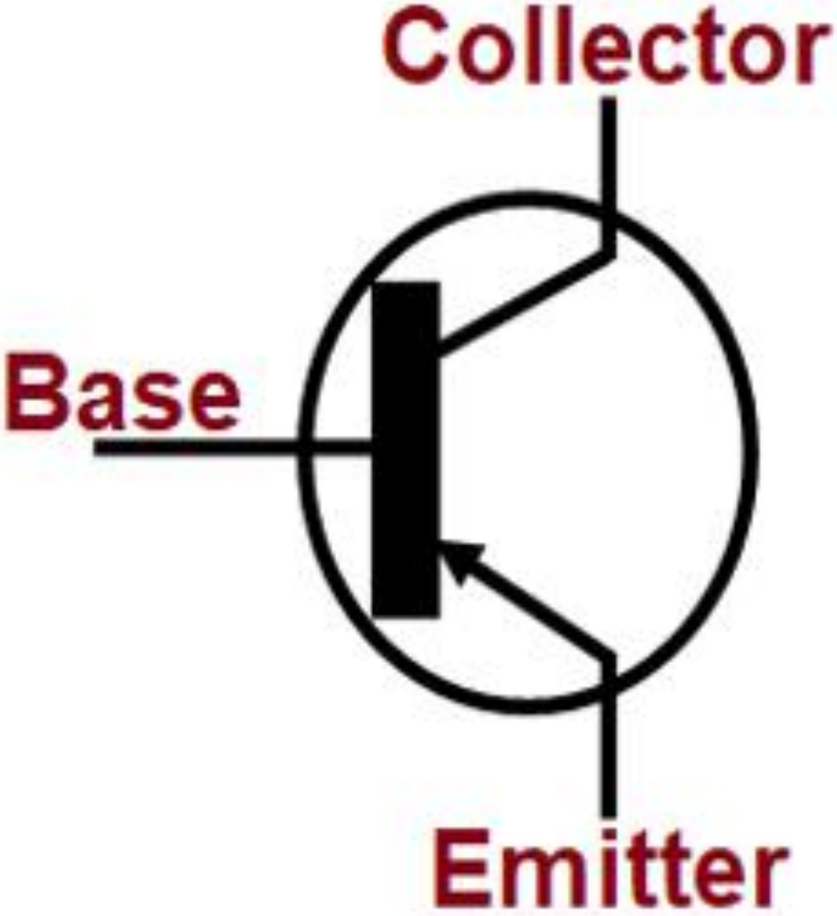

P-n-P

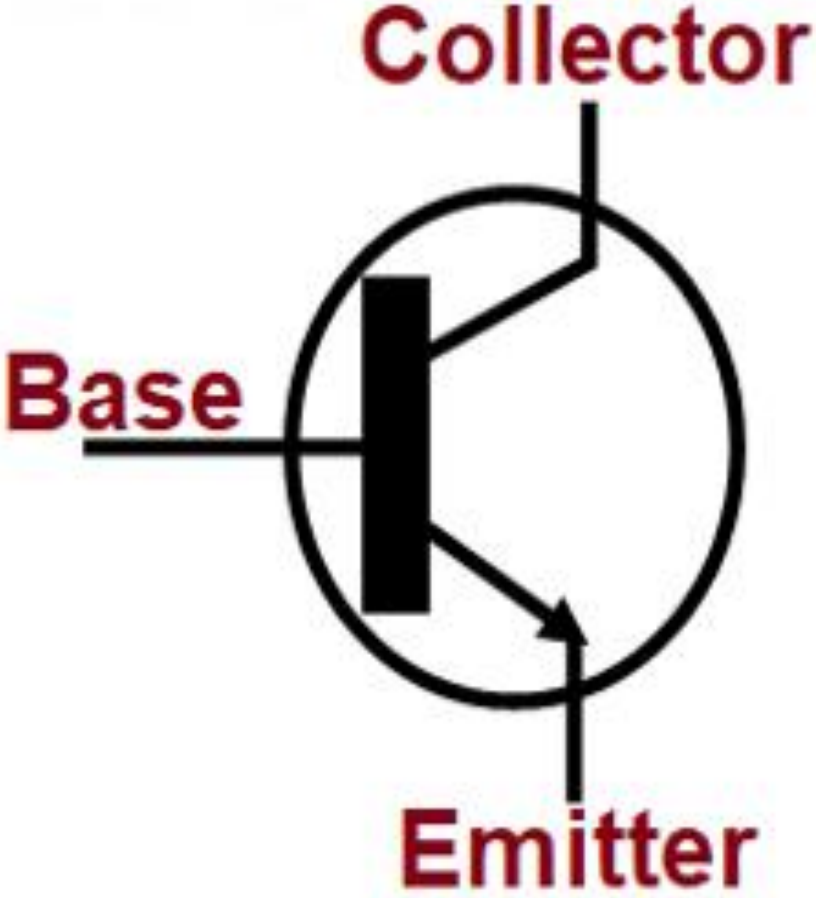

n-P-n

Regions of a transistor

- A transistor has three regions namely,
- Emitter- heavily doped
- Base- lightly doped
- Collector- moderately doped

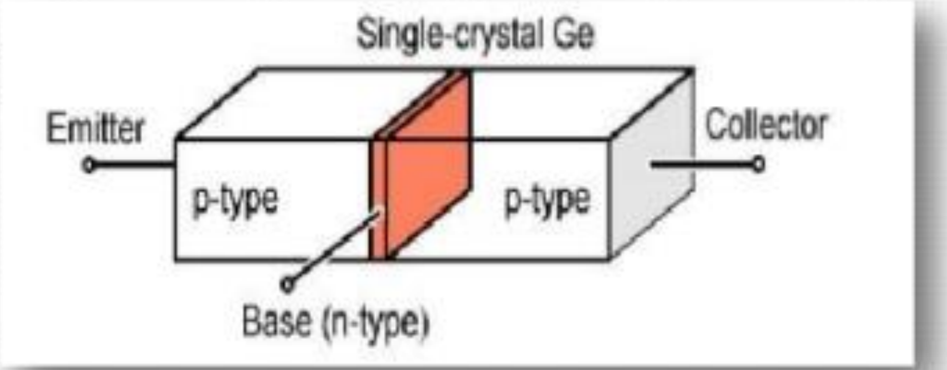

Position of the terminals and symbol of transistor.

- Base is located at the middle and more thin from the level of collector and emitter
- The emitter and collector terminals are made of the same type of semiconductor material, while the base of the other type of material

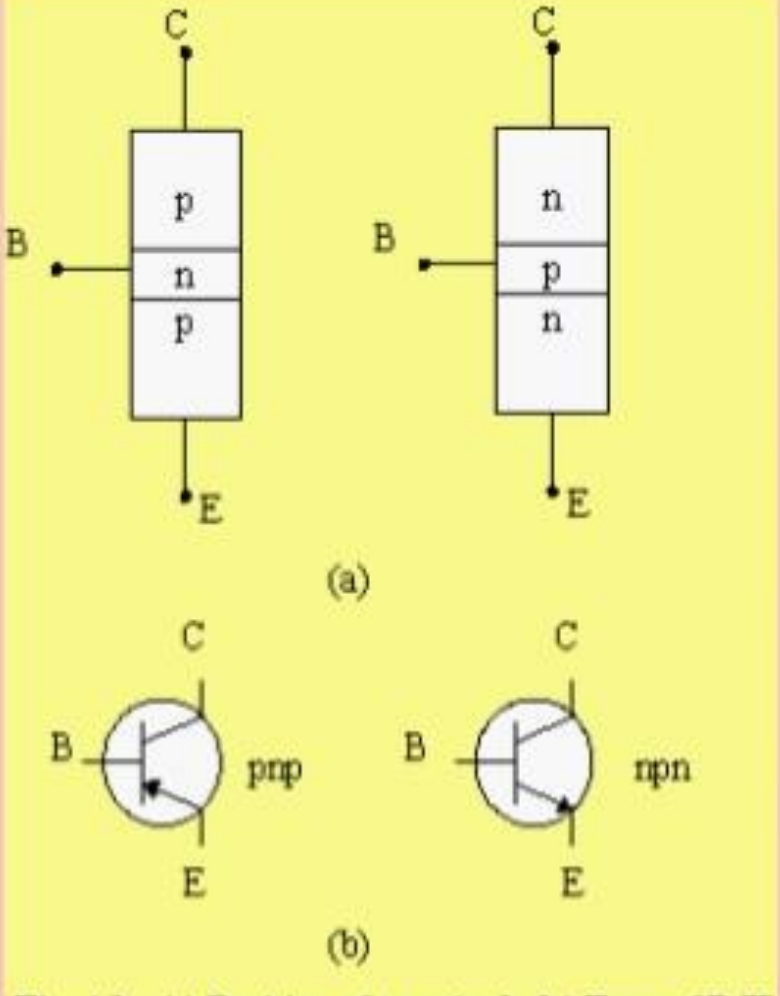

Fig. 4.1: (a) Position of terminals (b) Type of BJT

NPN transistor

Collector (n)

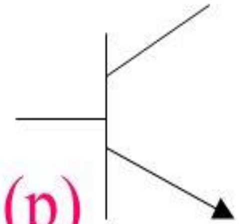

Base (p)

Emitter(n)

PNP transistor

Collector (p)

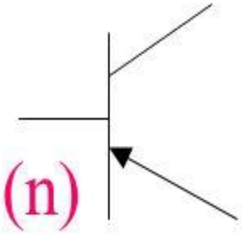

Base (n)

Emitter (p)

Emitter is moderately wide and highly doped

Base is very narrow and lightly doped

Collector is very wide and moderately doped

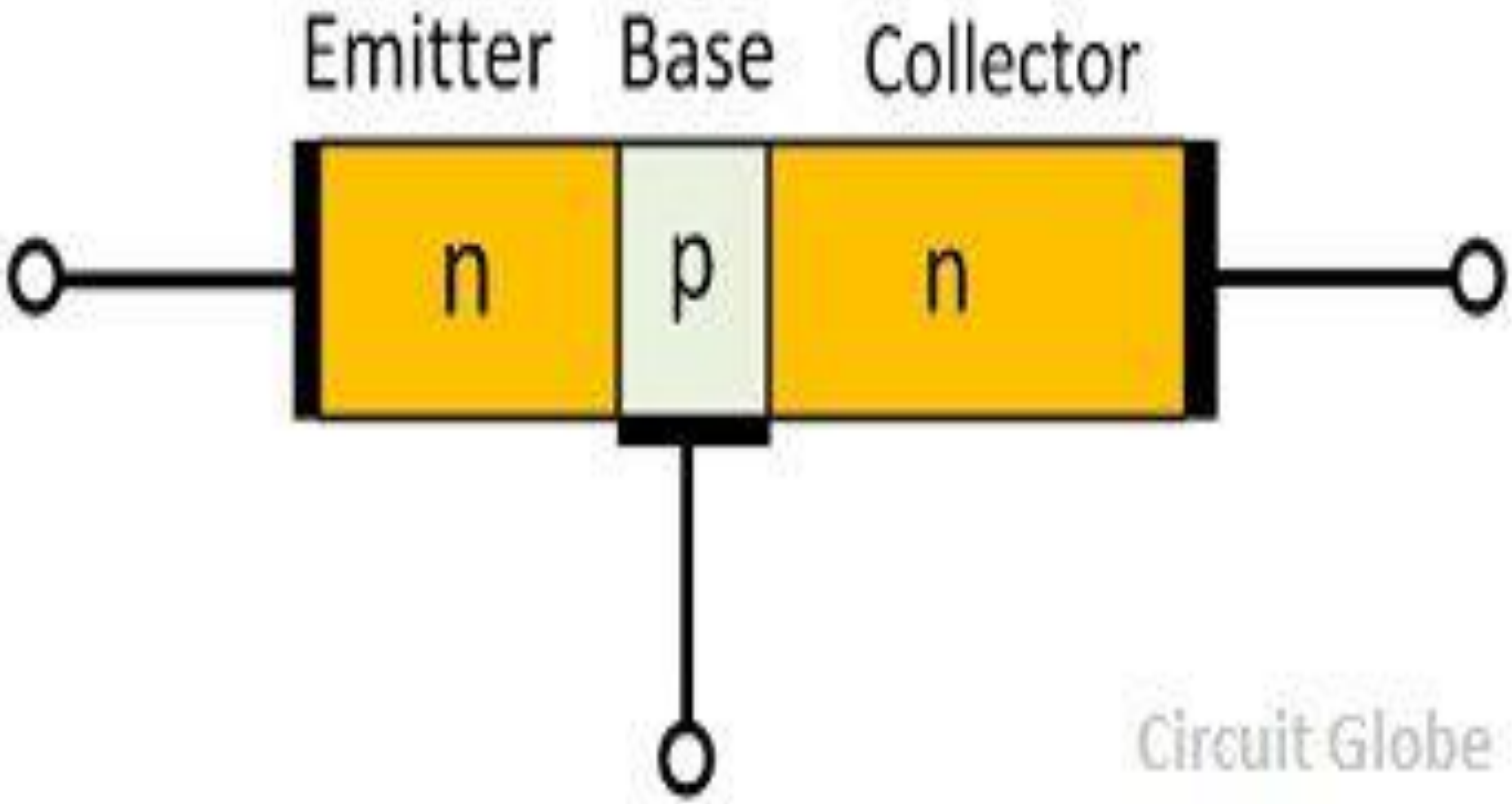
Emitter
Base
Collector
n
p
n
Circuit Globe

Types of transistor

- BJT - Bipolar Junction Transistor
- UJT- Unipolar Junction Transistor
- FET - Field Effect Transistor
- MOS - Metal Oxide Semiconductor

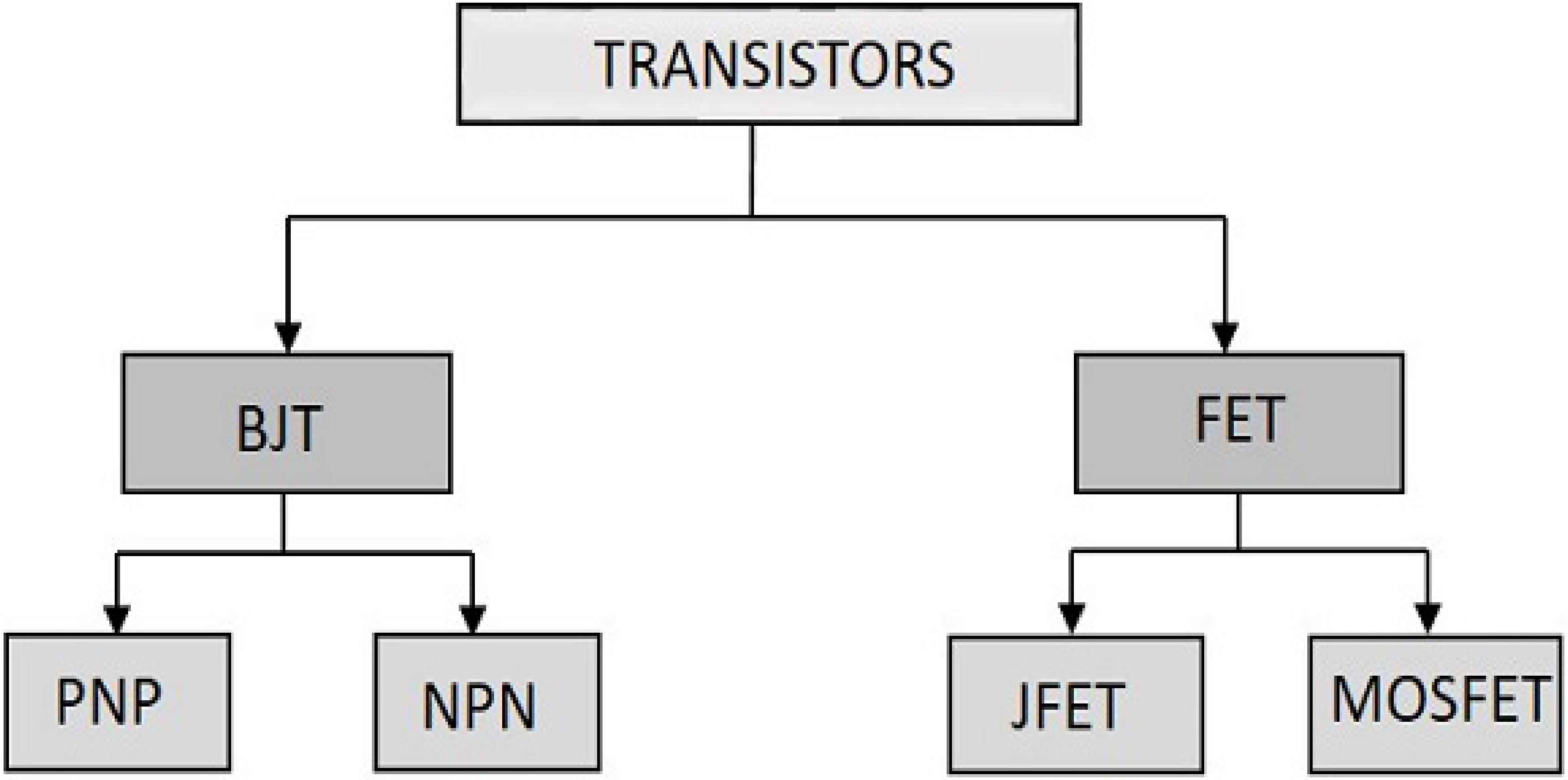
TRANSISTORS
BJT
FET
PNP
NPN
JFET
MOSFET

11.4 Transistor Action

The emitter-base junction of a transistor is forward biased whereas collector-base junction is reverse biased. If for a moment, we ignore the presence of emitter-base junction, then *practically** no current would flow in the collector circuit because of the reverse bias. However, if the emitter-base junction is also present, then forward bias on it causes the emitter current to flow. It is seen that this emitter current almost entirely flows in the collector circuit. Therefore, the current in the collector circuit depends upon the emitter current. If the emitter current is zero, then collector current is nearly zero. However, if the emitter current is 1mA, then collector current is also about 1mA. This is precisely what happens in a transistor. We shall now discuss this transistor action for *npn* and *pnp* transistors.

(*i*) **Working of npn transistor.** Fig. 11.4 shows the *npn* transistor with forward bias to emitter-base junction and reverse bias to collector-base junction. The forward bias causes the electrons in the *n*-type emitter to flow towards the base. This constitutes the emitter current I_E. As these electrons flow through the *p*-type base, they tend to combine with holes. As the base is lightly doped and very thin, therefore, only a few electrons (less than 5%) combine with holes to constitute base** current I_B. The remainder (***more than 95%) cross over into the collector region to constitute collector current I_C. In this way, almost the entire emitter current flows in the collector circuit. It is clear that emitter current is the sum of collector and base currents *i.e.*

$$I_E = I_B + I_C$$

---

* In actual practice, a very little current (a few μA) would flow in the collector circuit. This is called

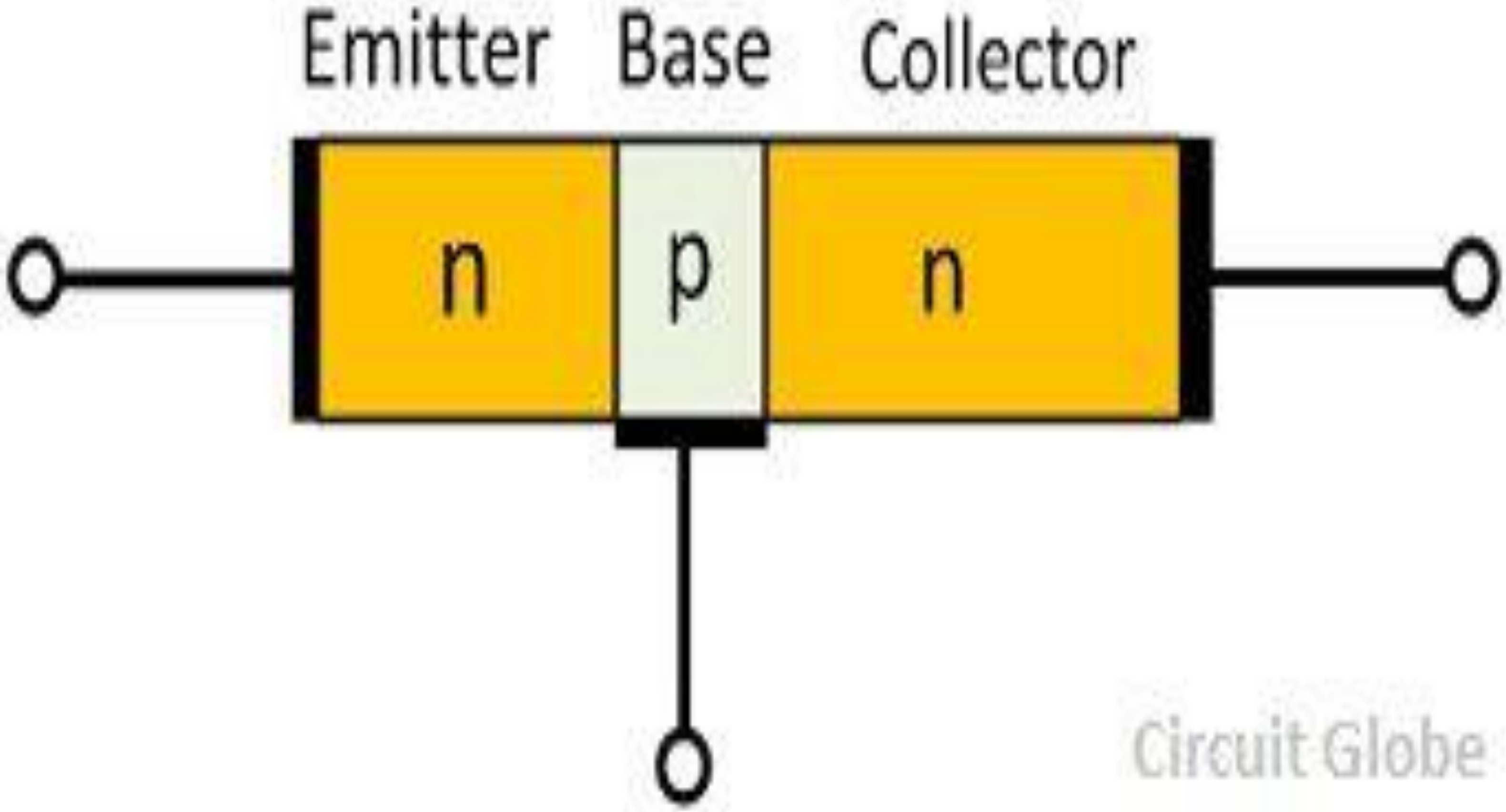
Emitter
Base
Collector
n
p
n
Circuit Globe

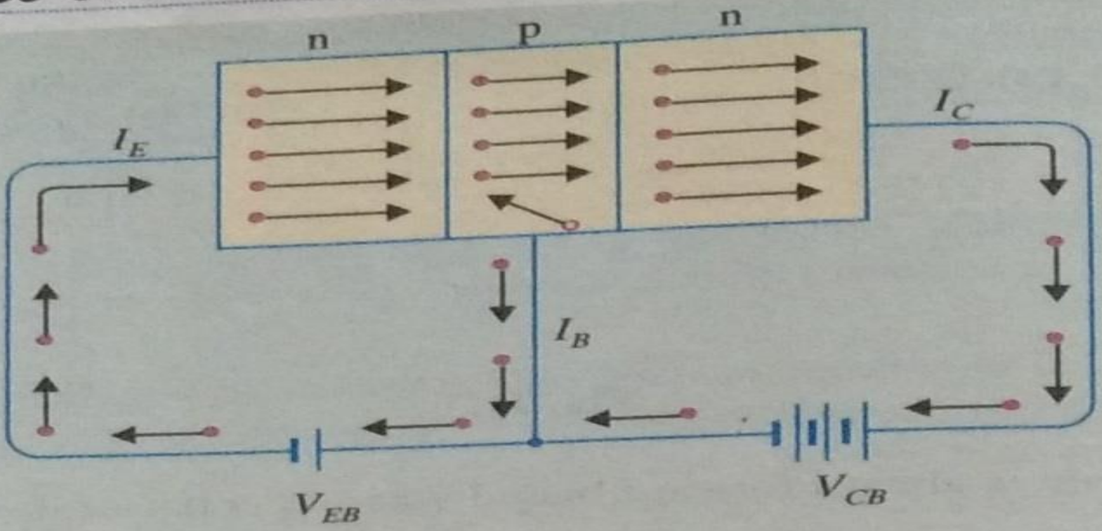

Basic connection of *npn* transistor

Fig. 11.4

i) **Working of pnp transistor.** Fig. 11.5 shows the basic connection of a *pnp* transistor. Th
rd bias causes the holes in the *p*-type emitter to flow towards the base. This constitutes t
er current I_E. As these holes cross into *n*-type base, they tend to combine with the electrons.
ase is lightly doped and very thin, therefore, only a few holes (less than 5%) combine with t

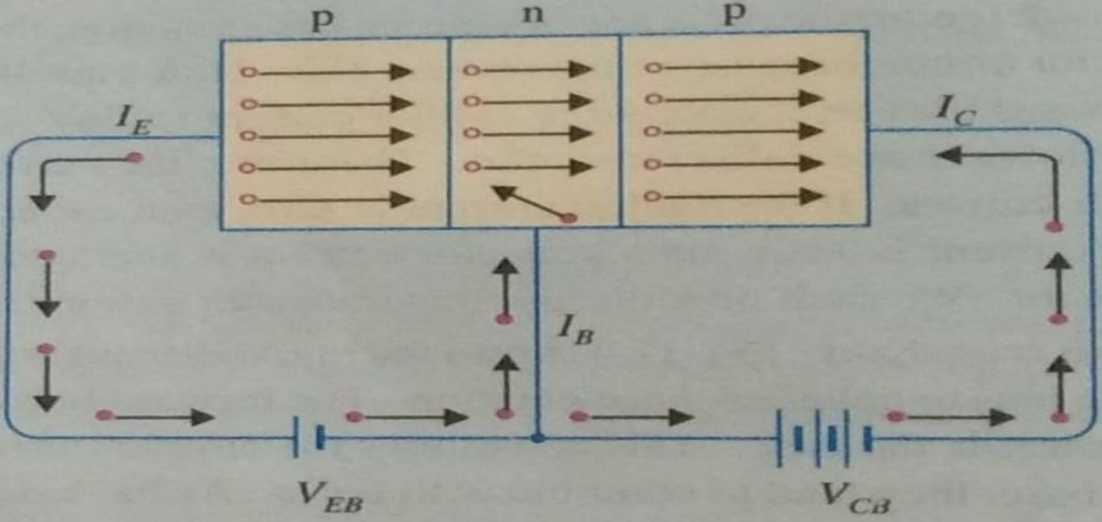

Transistor Operation

1) Working of npn transistor:

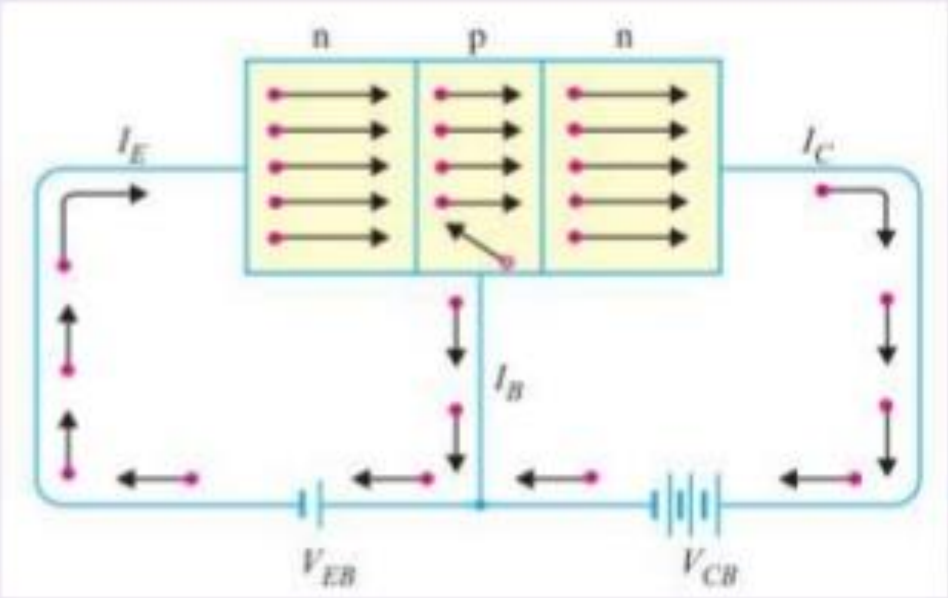

✓ Forward bias Is applied to emitter-base junction and reverse bias is applied to collector-base junction.

✓The forward bias in the emitter-base junction causes electrons to move toward base. This constitute emitter current, I_E

Transistor biasing

- The base-emitter (BE) junction is forward biased
- The base-collector (BC) junction is reverse biased.

$$I_E = I_B + I_C$$

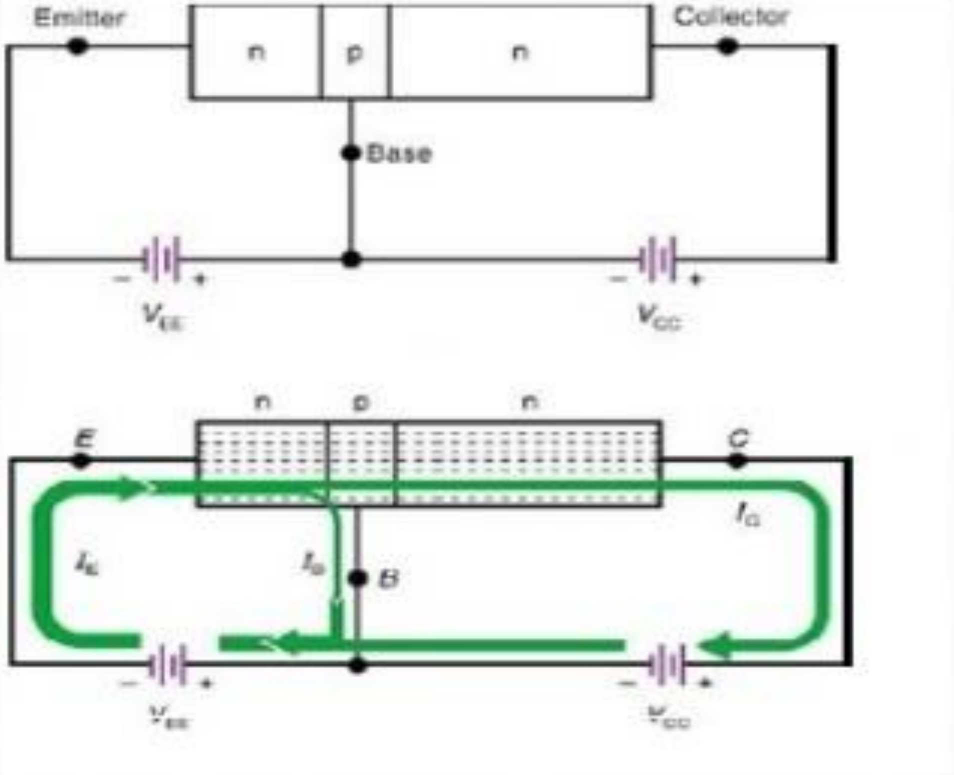

3.TRANSISTOR CIRCUIT CONFIGURATION

Basically three types of circuit connections for operating a transistor,

1. Common base (CB)configuration.
2. Common emitter (CE)configuration.
3. Common collector (CC)configuration.

‘common’ denotes an electrode that is common to input and the output circuit, because the common electrode is generally grounded.

Transistor Configurations

- Common-Base Configuration
- Common-Emitter Configuration
- Common-Collector Configuration

Common-Base Configuration

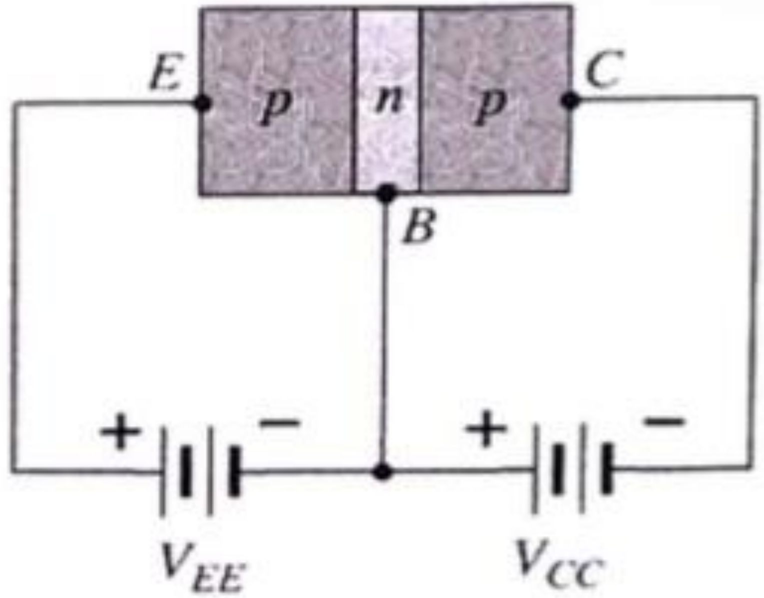

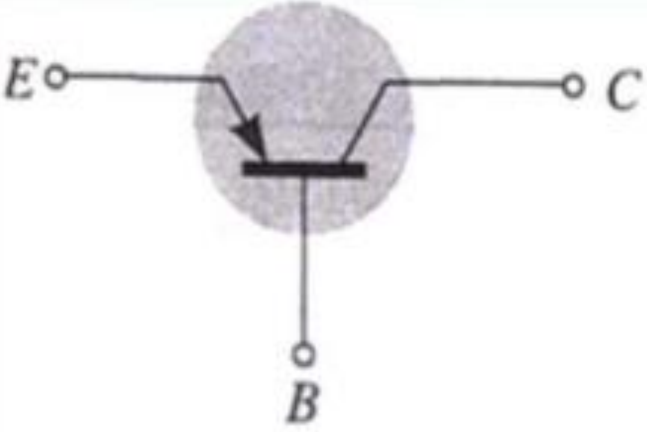

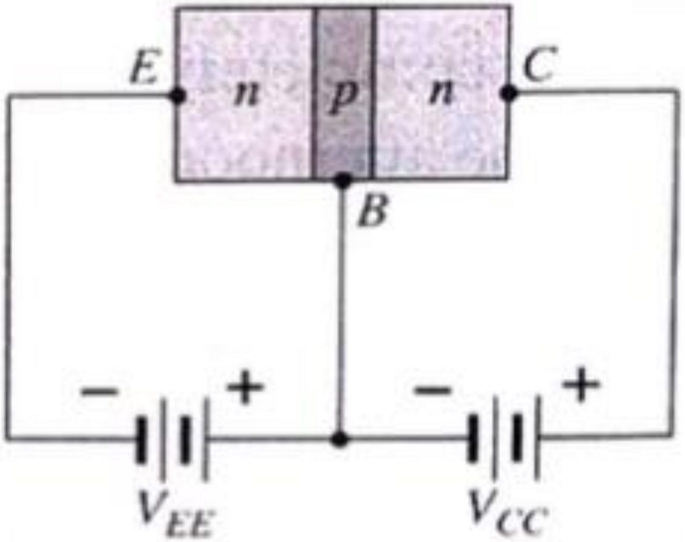

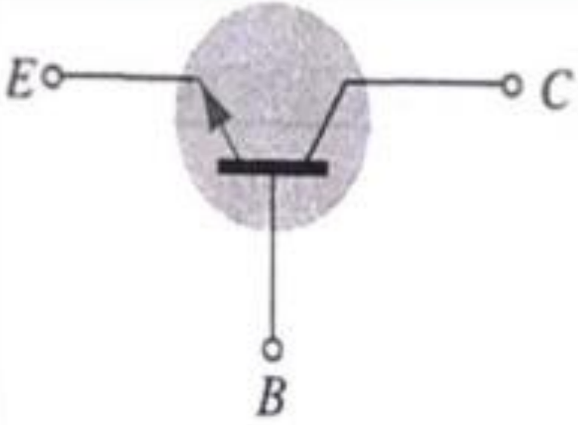

- ✓ **Common Base Configuration:**
- ✓ **In common base configuration, emitter is the input terminal, collector is the output terminal and base terminal is connected as a common terminal for both input and output.**

- ✓ **That means the emitter terminal and common base terminal are known as input terminals whereas the collector terminal and common base terminal are known as output terminals.**

- ✓ **In common base configuration, the base terminal is grounded so the common base configuration is also known as grounded base configuration.**

- ✓ **Sometimes common base configuration is referred to as common base amplifier, CB amplifier, or CB configuration.**

Common-Base Configuration

- The common-base configuration with *pnp* and *npn transistors are shown in the figures in the previous slide..*
- The term *common-base is derived from the* fact that the base is common to both the input and output sides of the configuration.
- The arrow in the symbol defines the direction of emitter current through the device.
- The applied biasing are such as to establish current in the direction indicated for each branch.
- That is, direction of I_E *is the same as the* polarity of V_{EE} *and* I_C *to* V_{CC}.
- Also, the equation $I_E = I_C + I_B$ *still holds.*

Common-Base Configuration

- Common-base terminology is derived from the fact that the :
  - base is common to both input and output of the configuration.
  - base is usually the terminal closest to or at ground potential.
- All current directions will refer to conventional (hole) flow and the arrows in all electronic symbols have a direction defined by this convention.
- Note that the applied biasing (voltage sources) are such as to establish current in the direction indicated for each branch.

Common base amplifier

- A **common base** also known as **grounded-base** amplifier is typically used as a voltage amplifier.
- In this circuit
  - The emitter terminal serves as the input
  - The collector as the output
  - The base is connected to ground, or "common".
- Features:
  - Low input impedance.
  - Moderate/High output impedance.
  - High Voltage Gain
  - Unity Current Gain.
  - Non-inverting amplifier.

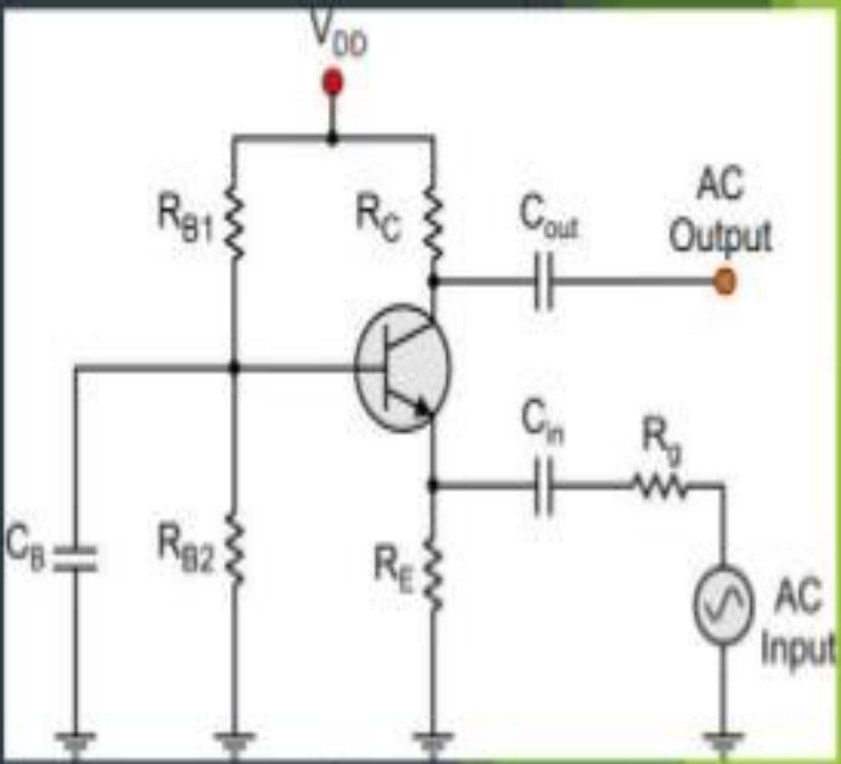

The Common base amplifier circuit

Circuit Arrangement For Input and Output Characteristic Curve in CB Configuration

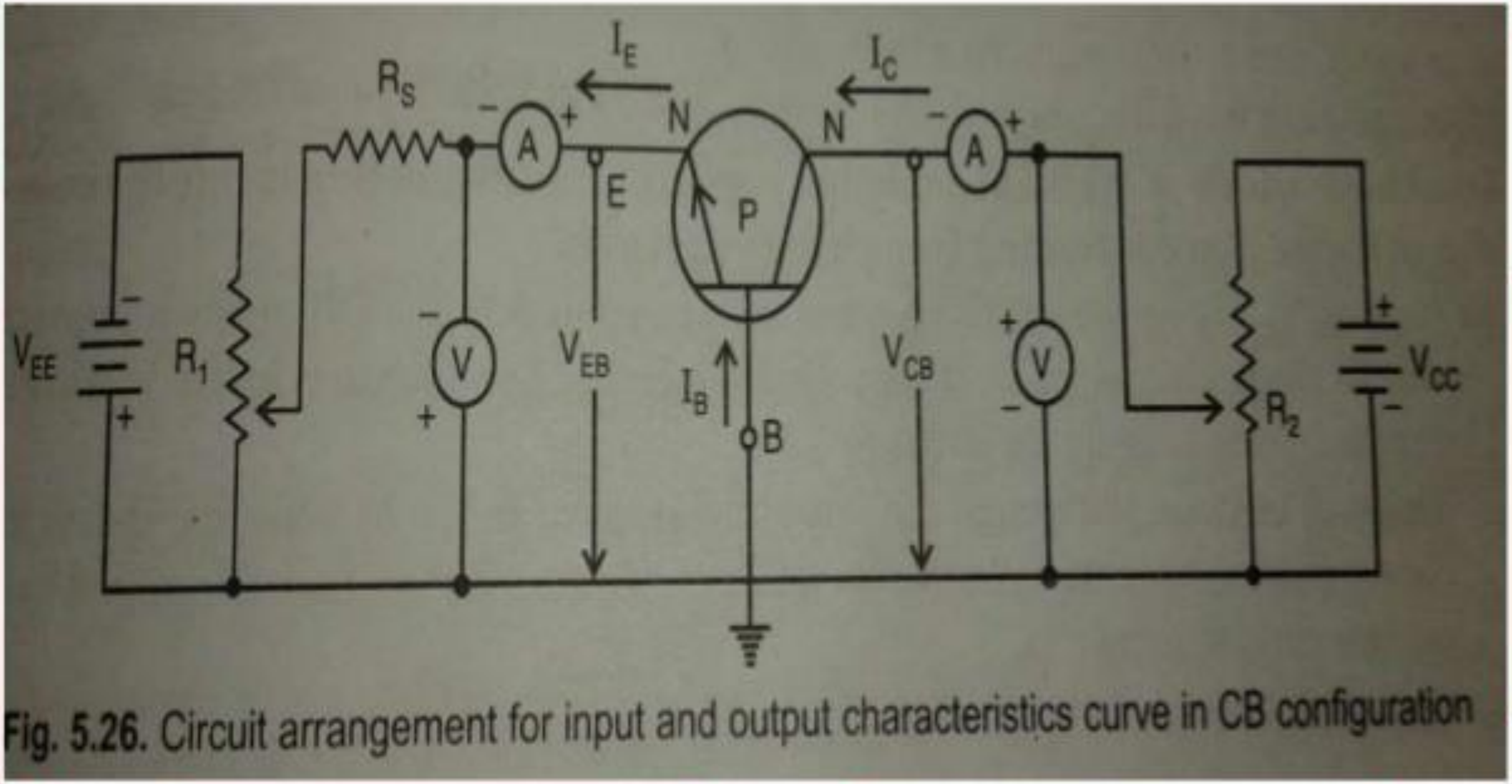

Fig. 5.26. Circuit arrangement for input and output characteristics curve in CB configuration

output. This difficulty is overcome by making one terminal of the transistor common to both input and output terminals. The input is fed between this common terminal and one of the other two terminals. The output is obtained between the common terminal and the remaining terminal. Accordingly; a transistor can be connected in a circuit in the following three ways :

(*i*) common base connection (*ii*) common emitter connection

(*iii*) common collector connection

Each circuit connection has specific advantages and disadvantages. It may be noted here that regardless of circuit connection, the emitter is always biased in the forward direction, while the collector always has a reverse bias.

11.8 Common Base Connection

In this circuit arrangement, input is applied between emitter and base and output is taken from collector and base. Here, base of the transistor is common to both input and output circuits and hence the name common base connection. In Fig. 11.9 (*i*), a common base *npn* transistor circuit is shown whereas Fig. 11.9 (*ii*) shows the common base *pnp* transistor circuit.

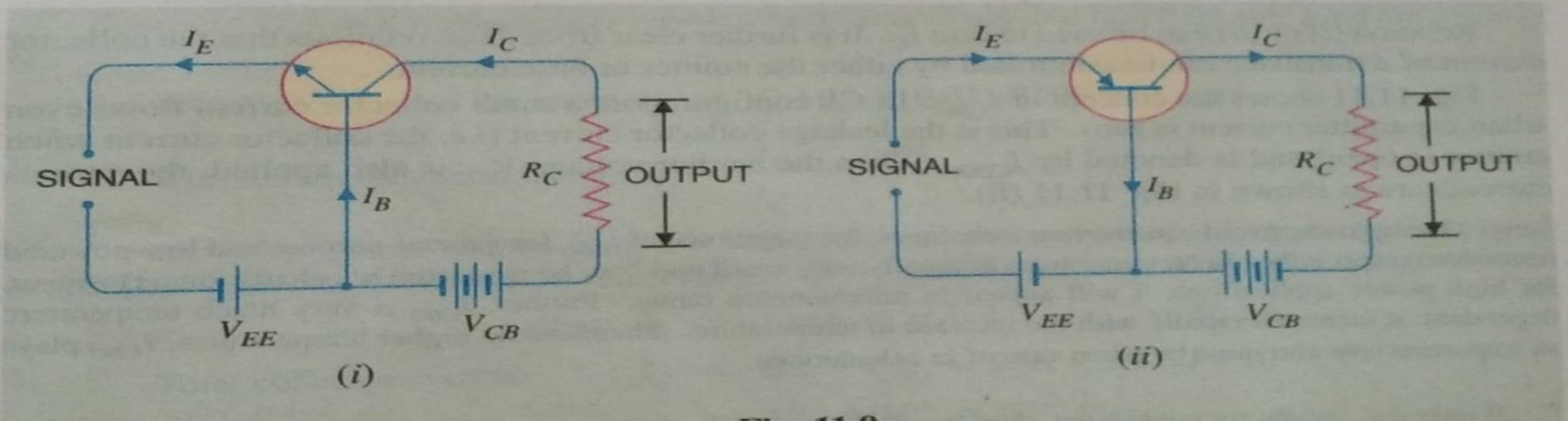

Fig. 11.9

1. Current amplification factor (α). It is the ratio of output current to input current. In a common base connection, the input current is the emitter current I_E and output current is the collector current I_C.

The ratio of change in collector current to the change in emitter current at constant collector-base voltage V_{CB} *is known as* **current amplification factor** *i.e.*

$$^*\alpha = \frac{\Delta I_C}{\Delta I_E} \text{ at constant } V_{CB}$$

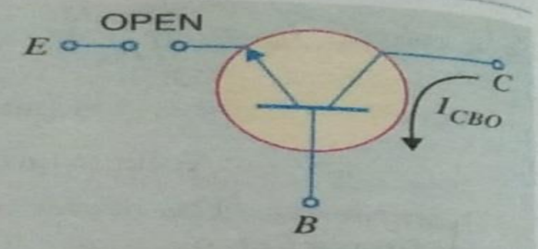

Fig. 11.10

It is clear that current amplification factor is less than **unity. This value can be increased (but not more than unity) by decreasing the base current. This is achieved by making the base thin and doping it lightly. Practical values of α in commercial transistors range from 0.9 to 0.99.

2. Expression for collector current. The whole of emitter current does not reach the collector. It is because a small percentage of it, as a result of electron-hole combinations occurring in base area, gives rise to base current. Moreover, as the collector-base junction is reverse biased, therefore, some leakage current flows due to minority carriers. It follows, therefore, that total collector current consists of :

(i) That part of emitter current which reaches the collector terminal *i.e.* ***αI_E.

(ii) The leakage current $I_{leakage}$. This current is due to the movement of minority carriers across base-collector junction on account of it being reverse biased. This is generally much smaller than αI_E.

∴ Total collector current, $I_C = \alpha I_E + I_{leakage}$

It is clear that if $I_E = 0$ (*i.e.*, emitter circuit is open), a small leakage current still flows in the collector circuit. This $I_{leakage}$ is abbreviated as I_{CBO}, meaning collector-base current with emitter open. The I_{CBO} is indicated in Fig. 11.10.

∴ $$I_C = \alpha I_E + I_{CBO} \qquad ...(i)$$

Now $$I_E = I_C + I_B$$

∴ $$I_C = \alpha (I_C + I_B) + I_{CBO}$$

or $$I_C (1 - \alpha) = \alpha I_B + I_{CBO}$$

or $$I_C = \frac{\alpha}{1-\alpha} I_B + \frac{I_{CBO}}{1-\alpha} \qquad ...(ii)$$

Relation (*i*) or (*ii*) can be used to find I_C. It is further clear from these relations that the collector current of a transistor can be controlled by either the emitter or base current.

Fig. 11.11 shows the concept of I_{CBO}. In *CB* configuration, a small collector current flows even when the emitter current is zero. This is the leakage collector current (*i.e.* the collector current when emitter is open) and is denoted by I_{CBO}. When the emitter voltage V_{EE} is also applied, the various currents are as shown in Fig. 11.11 (*ii*).

Note. Owing to improved construction techniques, the magnitude of I_{CBO} for general-purpose and low-powered transistors (especially silicon transistors) is usually very small and may be neglected in calculations. However, for high power applications, it will appear in microampere range. Further, I_{CBO} is very much temperature dependent; it increases rapidly with the increase in temperature. Therefore, at higher temperatures, I_{CBO} plays an important role and must be taken care of in calculations.

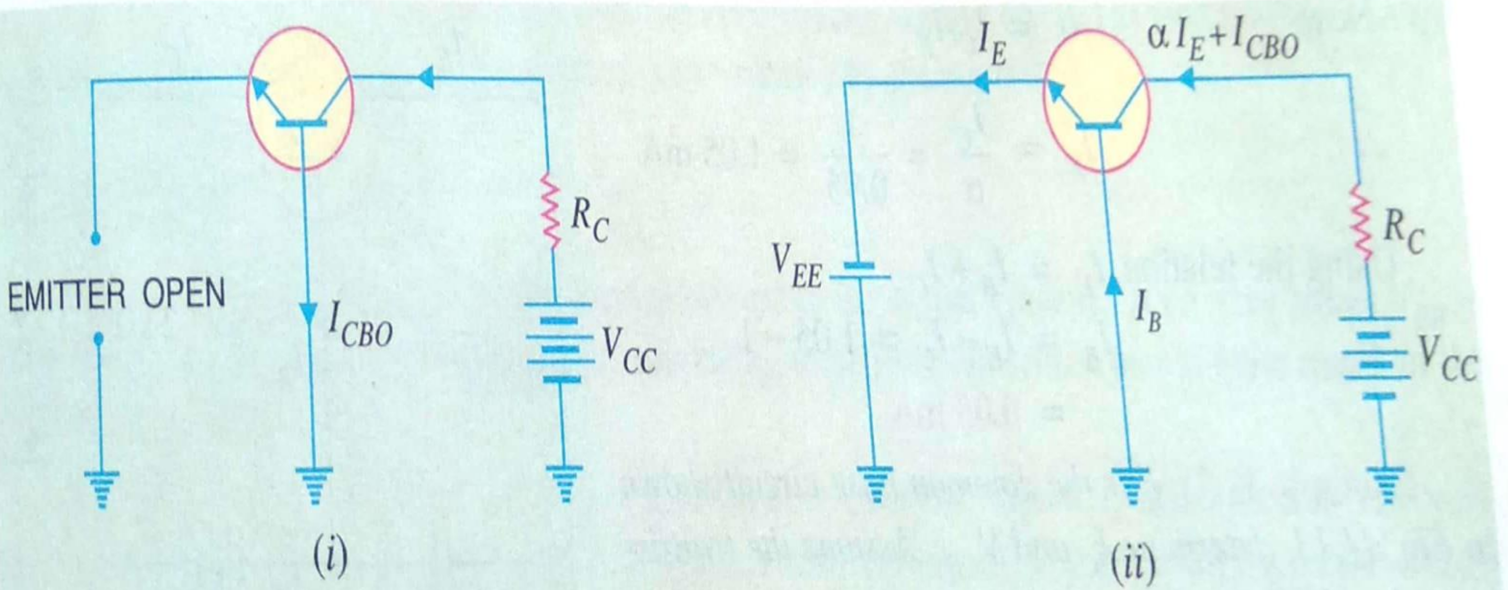

(i) (ii)

Fig. 11.11

Example 11.2. *In a common base connection, $I_E = 1mA$, $I_C = 0.95mA$. Calculate the value of I_B*

Solution. Using the relation, $I_E = I_B + I_C$

Transistor Characteristics in Common-Base Configuration

In common-base configuration 2 types of characteristics are :

1. Input Characteristics :

   Curves relate the input or emitter current I_E and input or emitter-to-base voltage V_{EB} keeping output or collector-to-base voltage V_{CB} constant.

2. Output Characteristics :

   Curves relate the output or collector current I_C and output or collector-to-base voltage V_{CB} keeping the input or emitter current I_E constant.

$V_{EE} = I_E R_E + V_{BE}$

or $\quad I_E = \dfrac{V_{EE} - V_{BE}}{R_E}$

$= \dfrac{8V - 0.7V}{1.5\ \text{k}\Omega} = 4.87\ \text{mA}$

$\therefore \quad I_C \simeq I_E = \mathbf{4.87\ mA}$

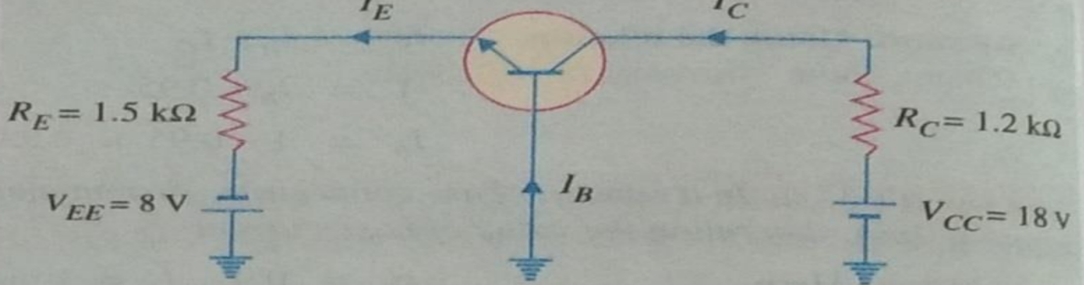

Fig. 11.13

Applying Kirchhoff's voltage law to the collector-side loop, we have,

$$V_{CC} = I_C R_C + V_{CB}$$

$$\therefore \quad V_{CB} = V_{CC} - I_C R_C = 18\ \text{V} - 4.87\ \text{mA} \times 1.2\ \text{k}\Omega = \mathbf{12.16\ V}$$

11.9 Characteristics of Common Base Connection

The complete electrical behaviour of a transistor can be described by stating the interrelation of the various currents and voltages. These relationships can be conveniently displayed graphically and the curves thus obtained are known as the characteristics of transistor. The most important characteristics of common base connection are *input characteristics* and *output characteristics.*

1. **Input characteristic.** It is the curve between emitter current I_E and emitter-base voltage V_{EB} at constant collector-base voltage V_{CB}. The emitter current is generally taken along *y*-axis and emitter-base voltage along *x*-axis. Fig. 11.14 shows the input characteristics of a typical transistor in *CB* arrangement. The following points may be noted from these characteristics :

(i) The emitter current I_E increases rapidly with small increase in emitter-base voltage V_{EB}. It means that input resistance is very small.

(ii) The emitter current is almost independent of collector-base voltage V_{CB}. This leads to the conclusion that emitter current (and hence collector current) is almost independent of collector voltage.

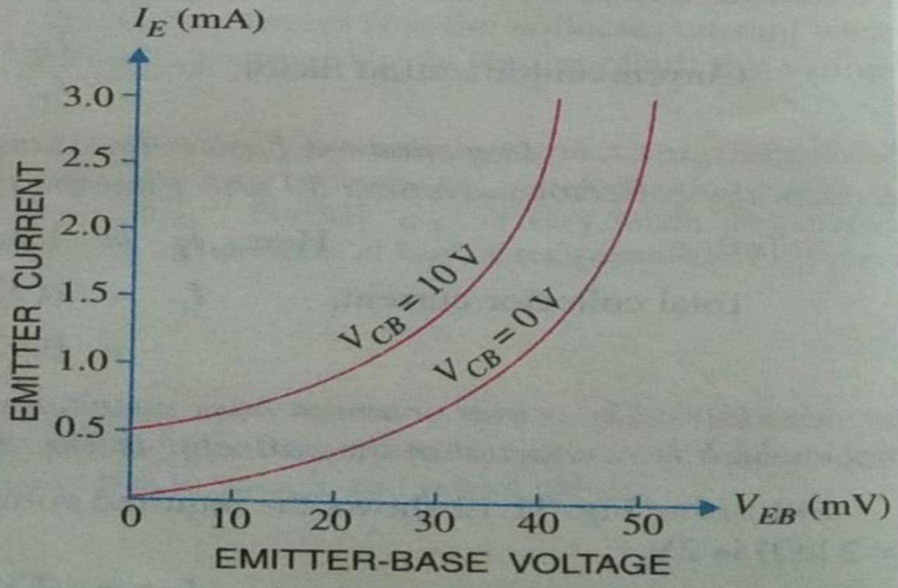

Fig. 11.14

Input resistance. It is the ratio of change in emitter-base voltage (ΔV_{EB}) to the resulting change in emitter current (ΔI_E) at constant collector-base voltage (V_{CB}) *i.e.*

$$\text{Input resistance, } r_i = \frac{\Delta V_{BE}}{\Delta I_E} \quad \text{at constant } V_{CB}$$

In fact, input resistance is the opposition offered to the signal current. As a very small V_{EB} is sufficient to produce a large flow of emitter current I_E, therefore, input resistance is quite small, of the order of a few ohms.

2. **Output characteristic.** It is the curve between collector current I_C and collector-base voltage V_{CB} at constant emitter current I_E. Generally, collector current is taken along *y*-axis and collector-base voltage along *x*-axis. Fig. 11.15 shows the output characteristics of a typical transistor in *CB* arrangement.

The following points may be noted from the characteristics :

(*i*) The collector current I_C varies with V_{CB} only at very low voltages (< 1V). The transistor is *never* operated in this region.

(*ii*) When the value of V_{CB} is raised above 1 − 2 V, the collector current becomes constant as indicated by straight horizontal curves. It means that now I_C is independent of V_{CB} and depends upon I_E only. This is consistent with the theory that the emitter current flows *almost* entirely to the collector terminal. The transistor is *always* operated in this region.

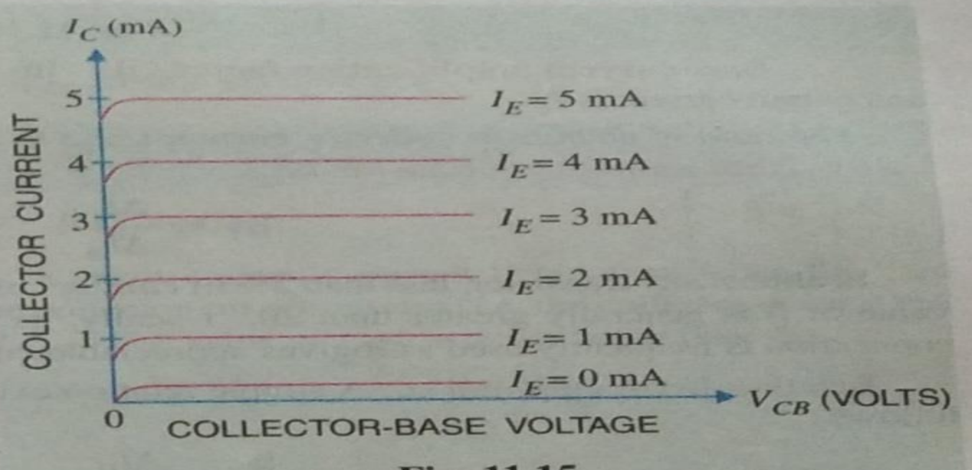

Fig. 11.15

(*iii*) A very large change in collector-base voltage produces only a tiny change in collector current. This means that output resistance is very high.

Output resistance. It is the ratio of change in collector-base voltage (ΔV_{CB}) to the resulting change in collector current (ΔI_C) at constant emitter current *i.e.*

$$\text{Output resistance, } r_o = \frac{\Delta V_{CB}}{\Delta I_C} \quad \text{at constant } I_E$$

The output resistance of *CB* circuit is very high, of the order of several tens of kilo-ohms. This is not surprising because the collector current changes very slightly with the change in V_{CB}.

11.10 Common Emitter Connection

Output characteristics

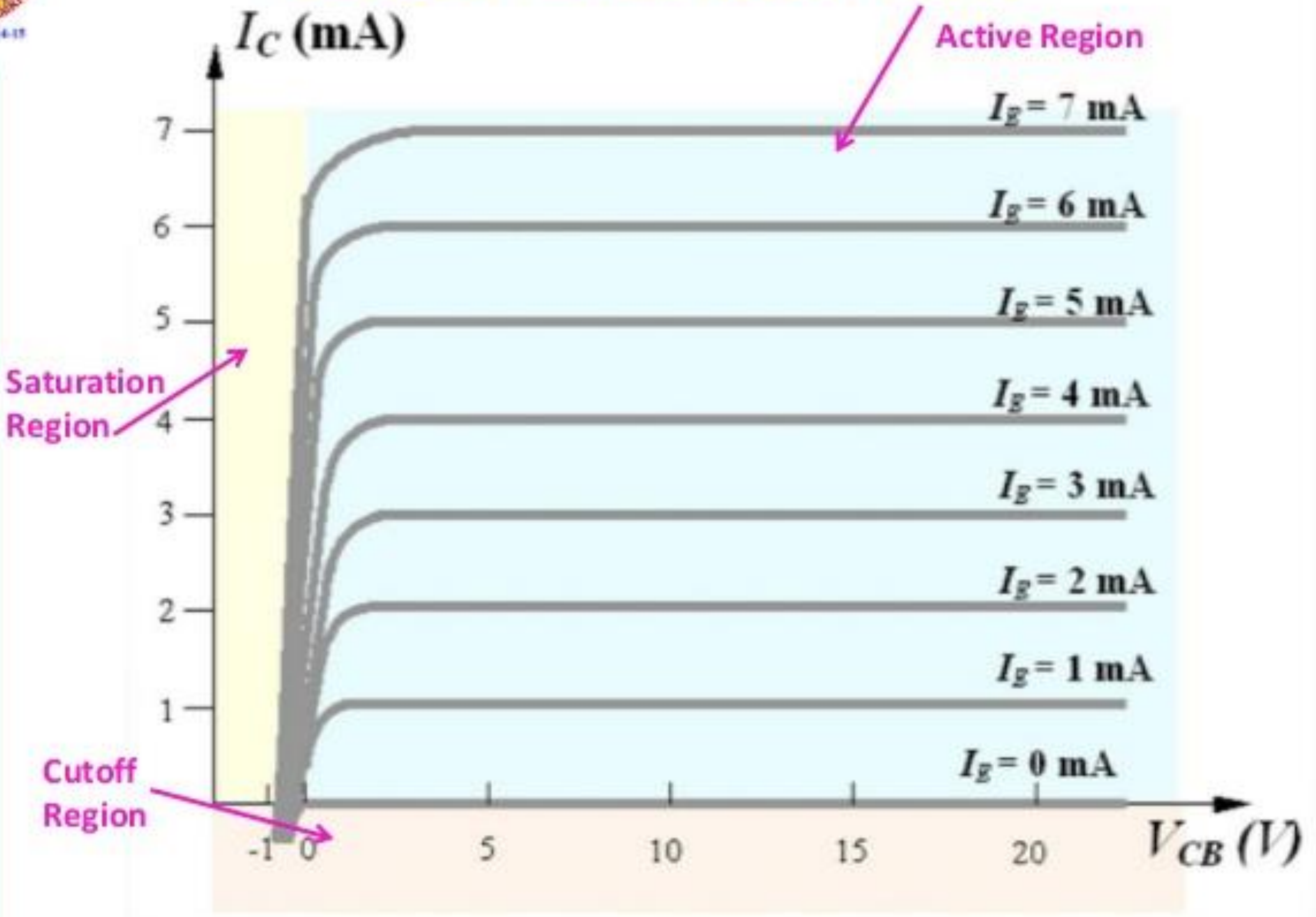

Figure: Output characteristics for common-base transistor

Experimental Output of CB Amplifier

Amplified output

Signal Input

common-emitter configurations

- Most common configuration of transistor is as shown
- *emitter* terminal is common to input and output circuits this is a **common-emitter** configuration
- we will look at the characteristics of the device in this configuration
- The current relations are still applicable, *i.e.,*
- $I_E = I_C + I_B$ and $I_C = \alpha I_E$

The common-emitter configuration with *npn* and *pnp transistors are shown in the figures.*

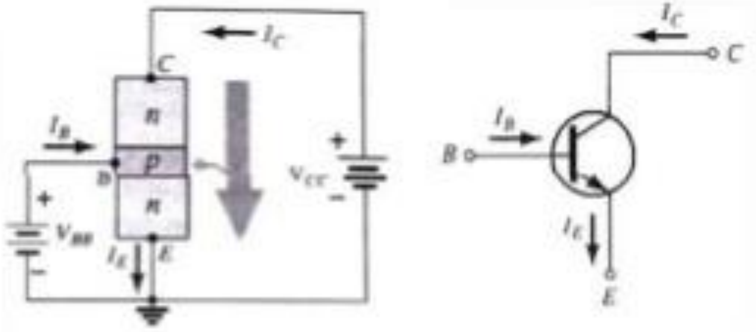

Figure: Common-emitter configuration of *npn transistor*

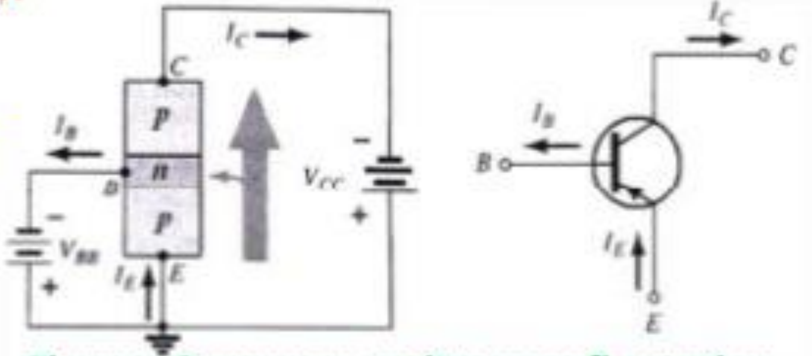

Figure: Common-emitter configuration of *pnp transistor*

Common Emitter Configuration:

- In common emitter configuration, base is the input terminal, collector is the output terminal and emitter is the common terminal for both input and output.

- That means the base terminal and common emitter terminal are known as input terminals whereas collector terminal and common emitter terminal are known as output terminals.

- In common emitter configuration, the emitter terminal is grounded so the common emitter configuration is also known as grounded emitter configuration.

- Sometimes common emitter configuration is also referred to as CE configuration, common emitter amplifier, or CE amplifier. The common emitter (CE) configuration is the most widely used transistor configuration.

Common emitter configuration

- Emitter is common for both input and output.
- It provides both current and voltage gain.
- Output has a phase shift of 180 degree with respect to input.

$\beta = \frac{I_C}{I_B}$ $\alpha = \frac{I_C}{I_E}$

$$Voltage\ gain = \frac{V_{out}}{V_{in}} = \frac{\Delta V_L}{\Delta V_B} = -\frac{R_L}{R_E}$$

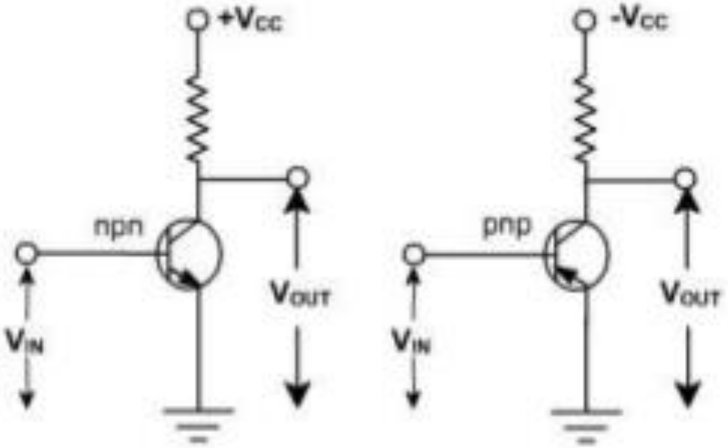

Common Emitter Amplifier

- a common emitter amplifier is typically used as a voltage amplifier
- Input is applied to base ,output is taken across collector and the emitter is grounded.
- Features:
  - Moderate /high input impedance.
  - Moderate output impedance.
  - High Voltage Gain
  - High Currant Gain.
  - Output is Inverted

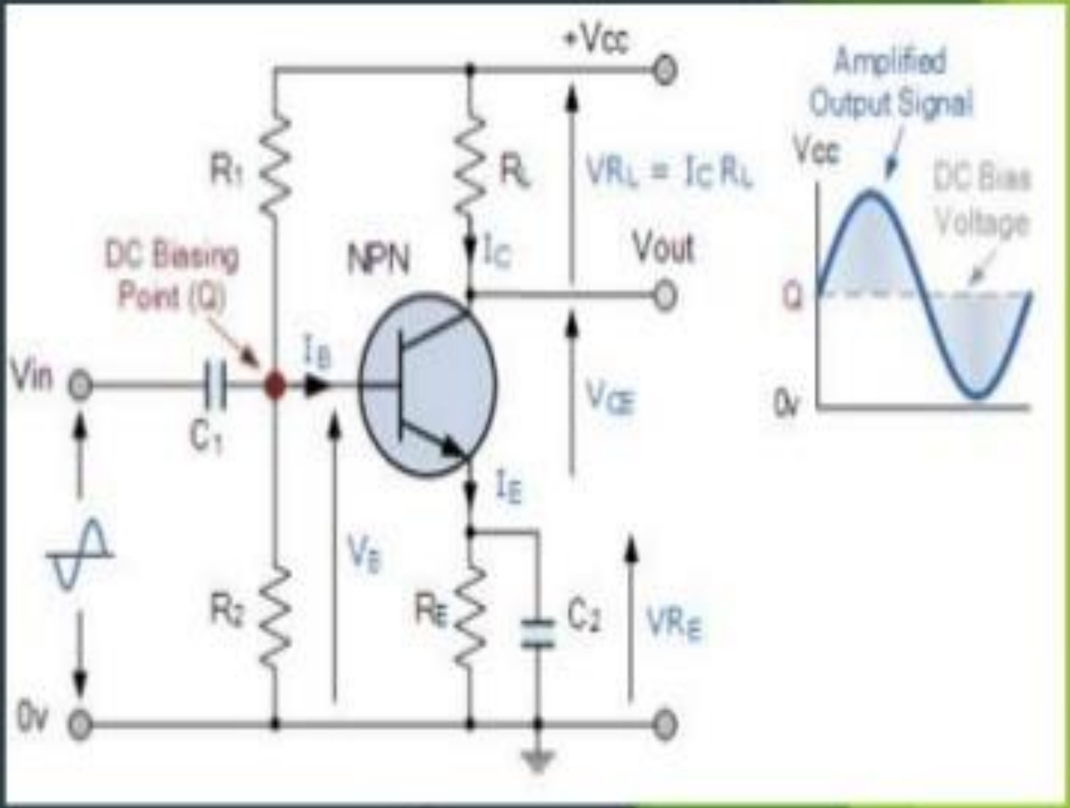

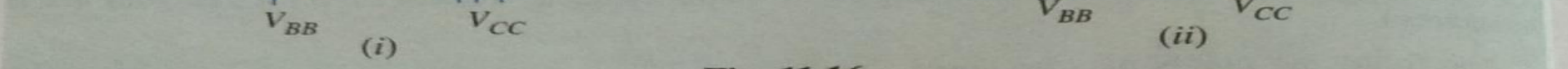

Fig. 11.16

1. **Base current amplification factor (β).** In common emitter connection, input current is I_B and output current is I_C.

The ratio of change in collector current (ΔI_C) to the change in base current (ΔI_B) is known as **base current amplification factor** *i.e.*

$$\beta^{*} = \frac{\Delta I_C}{\Delta I_B}$$

In almost any transistor, less than 5% of emitter current flows as the base current. Therefore, the value of β is generally greater than 20. Usually, its value ranges from 20 to 500. This type of connection is frequently used as it gives appreciable current gain as well as voltage gain.

Relation between β and α. A simple relation exists between β and α. This can be derived as follows :

$$\beta = \frac{\Delta I_C}{\Delta I_B} \qquad \text{...}(i)$$

$$\alpha = \frac{\Delta I_C}{\Delta I_E} \qquad \text{...}(ii)$$

Now $\quad I_E = I_B + I_C$

or $\quad \Delta I_E = \Delta I_B + \Delta I_C$

or $\quad \Delta I_B = \Delta I_E - \Delta I_C$

Substituting the value of ΔI_B in exp. (*i*), we get,

$$\beta = \frac{\Delta I_C}{\Delta I_E - \Delta I_C} \qquad \text{...}(iii)$$

Dividing the numerator and denominator of R.H.S. of exp. (*iii*) by ΔI_E, we get,

$$\beta = \frac{\Delta I_C / \Delta I_E}{\dfrac{\Delta I_E}{\Delta I_E} - \dfrac{\Delta I_C}{\Delta I_E}} = \frac{\alpha}{1-\alpha} \qquad \left[\because \quad \alpha = \frac{\Delta I_C}{\Delta I_E}\right]$$

$$\therefore \qquad \beta = \frac{\alpha}{1-\alpha}$$

It is clear that as α approaches unity, β approaches infinity. In other words, the current gain in common emitter connection is very high. It is due to this reason that this circuit arrangement is used in about 90 to 95 percent of all transistor applications.

---

* If d.c. values are considered, $\beta = I_C/I_B$.

2. Expression for collector current. In common emitter circuit, I_B is the input current and I_C is the output current.

$$\text{We know } I_E = I_B + I_C \qquad \ldots(i)$$

and

$$I_C = \alpha I_E + I_{CBO} \qquad \ldots(ii)$$

From exp. (*ii*), we get,

$$I_C = \alpha I_E + I_{CBO} = \alpha (I_B + I_C) + I_{CBO}$$

or

$$I_C (1 - \alpha) = \alpha I_B + I_{CBO}$$

or

$$I_C = \frac{\alpha}{1-\alpha} I_B + \frac{1}{1-\alpha} I_{CBO} \qquad \ldots(iii)$$

From exp. (*iii*), it is apparent that if $I_B = 0$ (*i.e.* base circuit is open), the collector current will be the current to the emitter. This is abbreviated as I_{CEO}, meaning collector-emitter current with base open.

$$\therefore \quad I_{CEO} = \frac{1}{1-\alpha} I_{CBO}$$

Substituting the value of $\frac{1}{1-\alpha} I_{CBO} = I_{CEO}$ in exp. (*iii*), we get,

$$I_C = \frac{\alpha}{1-\alpha} I_B + I_{CEO}$$

or

$$I_C = \beta I_B + I_{CEO} \qquad \left(\because \beta = \frac{\alpha}{1-\alpha}\right)$$

Concept of I_{CEO}. In *CE* configuration, a small collector current flows even when the base current is zero [See Fig. 11.17 (*i*)]. This is the collector cut off current (*i.e.* the collector current that flows when base is open) and is denoted by I_{CEO}. The value of I_{CEO} is much larger than I_{CBO}.

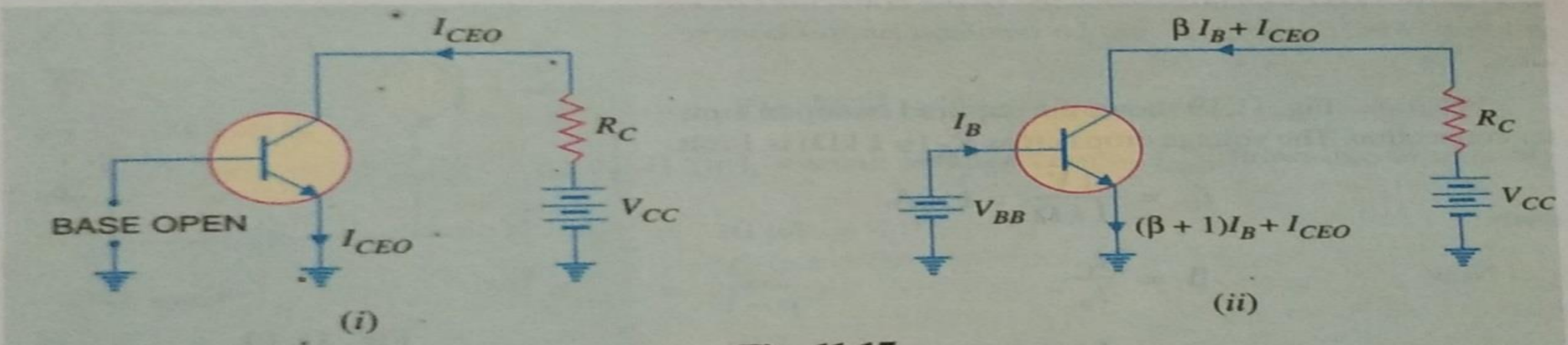

Fig. 11.17

When the base voltage is applied as shown in Fig. 11.17 (*ii*), then the various currents are :

Base current = I_B

Collector current = $\beta I_B + I_{CEO}$

Emitter current = Collector current + Base current

Input characteristics

- It is a curve which shows the relationship between the base current, I_B and the collector base voltage V_{CB} at constant V_{CE} This method of determining the characteristic is as follows.
- First, a suitable voltage is applied between the emitter and the collector.
- Next the input voltage V_{CB} is increased in a number of steps and corresponding values of I_E are noted.
- The base current is taken on the y-axis, and the input voltage is taken on the x-axis. Fig. shows the family of the input characteristic at different collector- emitter voltages.

Input characteristics

- the input takes the form of a forward-biased *pn* junction
- the input characteristics are therefore similar to those of a semiconductor diode

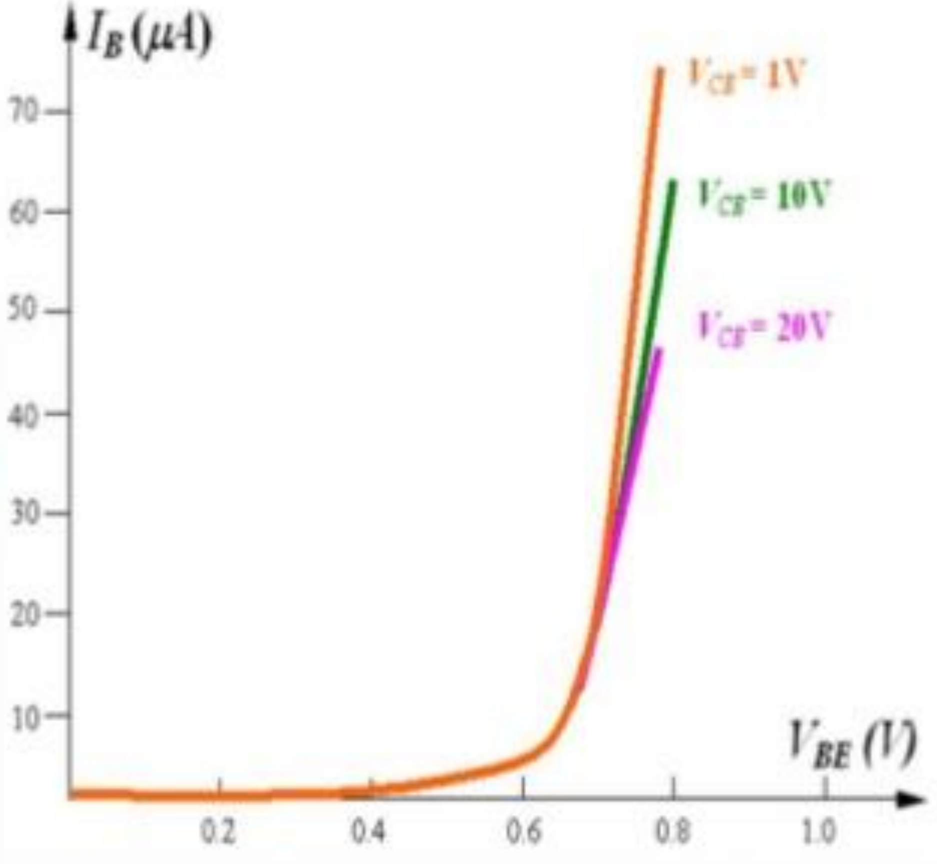

An input current (I_B) *is a function of an* input voltage (V_{BE}) *for various of output* voltage (V_{CE} *).*

Output characteristics

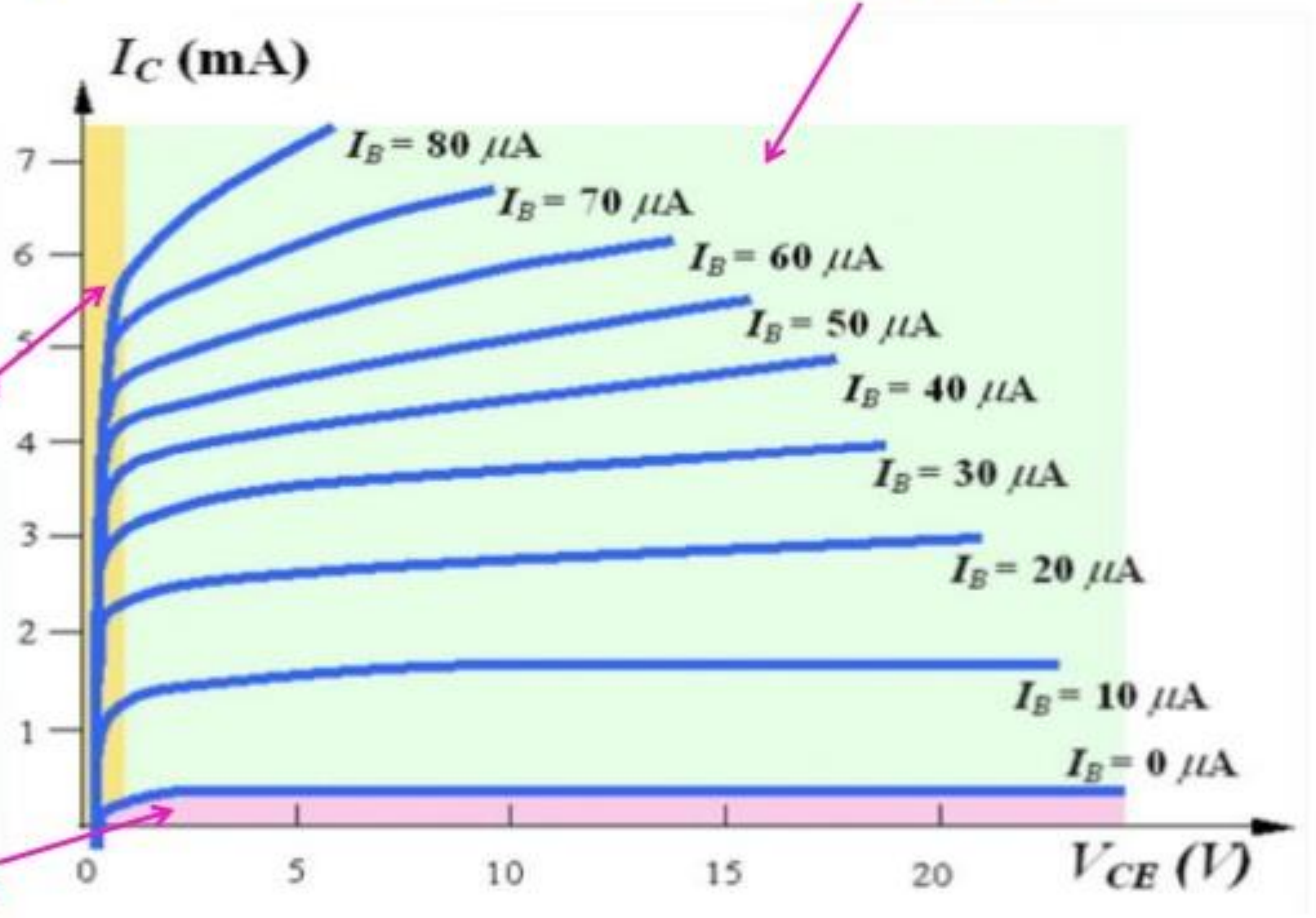

Figure: Output characteristics for common-emitter transistor

Experimental Output of CE

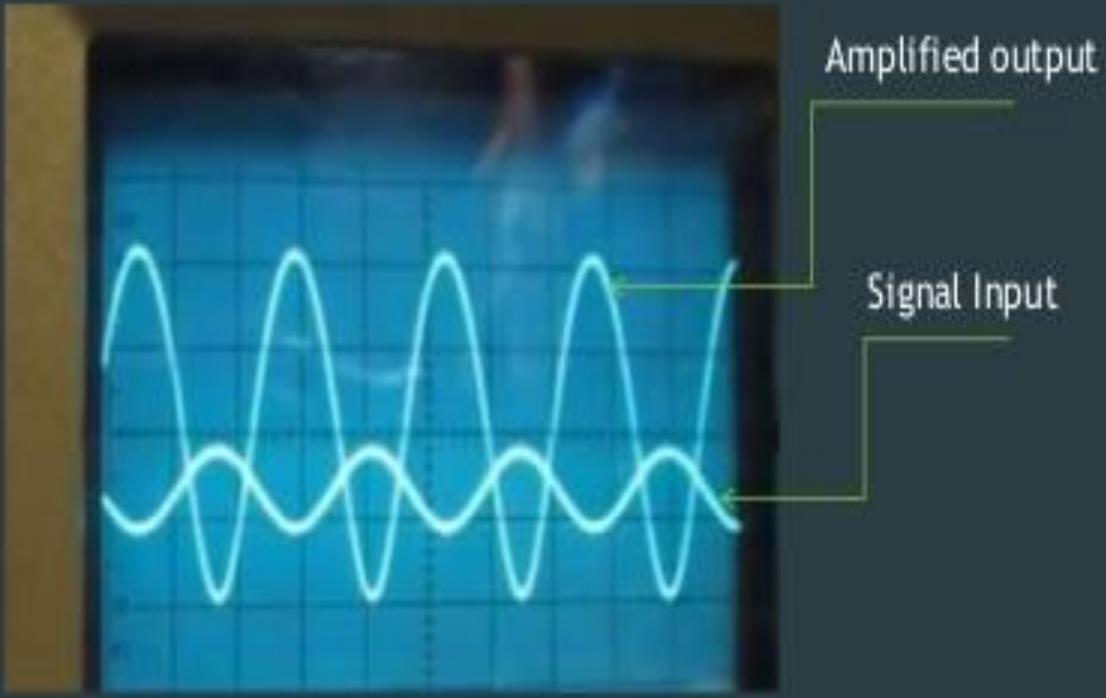

Common-Collector Configuration

- The common-collector configuration with *npn and pnp transistors are shown in the* figures.

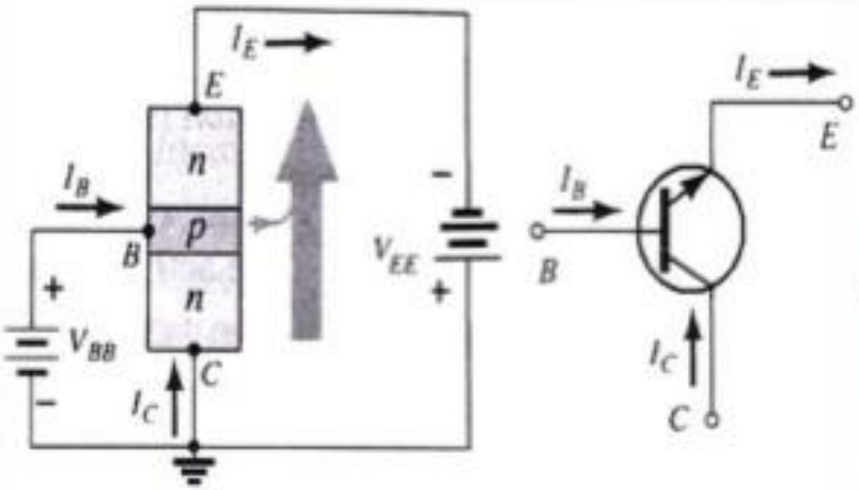

Figure: Common-collector configuration of *npn transistor*

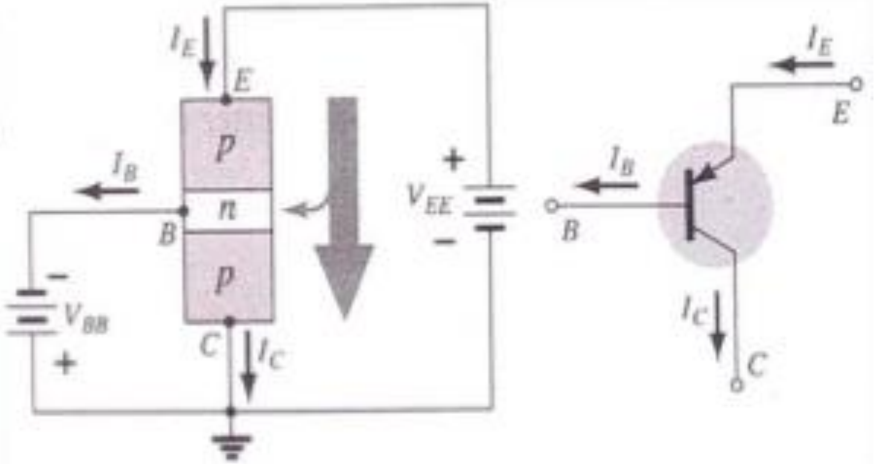

Figure: Common- collector configuration of *pnp transistor*

equal to

Output resistance. It is the ratio of change in collector-emitter voltage (ΔV_{CE}) to the change in collector current (ΔI_C) at constant I_B *i.e.*

$$\text{Output resistance, } r_o = \frac{\Delta V_{CE}}{\Delta I_C} \text{ at constant } I_B$$

It may be noted that whereas the output characteristics of *CB* circuit are horizontal, they have noticeable slope for the *CE* circuit. Therefore, the output resistance of a *CE* circuit is less than that of *CB* circuit. Its value is of the order of 50 kΩ.

11.12 Common Collector Connection

In this circuit arrangement, input is applied between base and collector while output is taken between the emitter and collector. Here, collector of the transistor is common to both input and output circuits and hence the name common collector connection. Fig. 11.25 (*i*) shows common collector *npn* transistor circuit whereas Fig. 11.25 (*ii*) shows common collector *pnp* circuit.

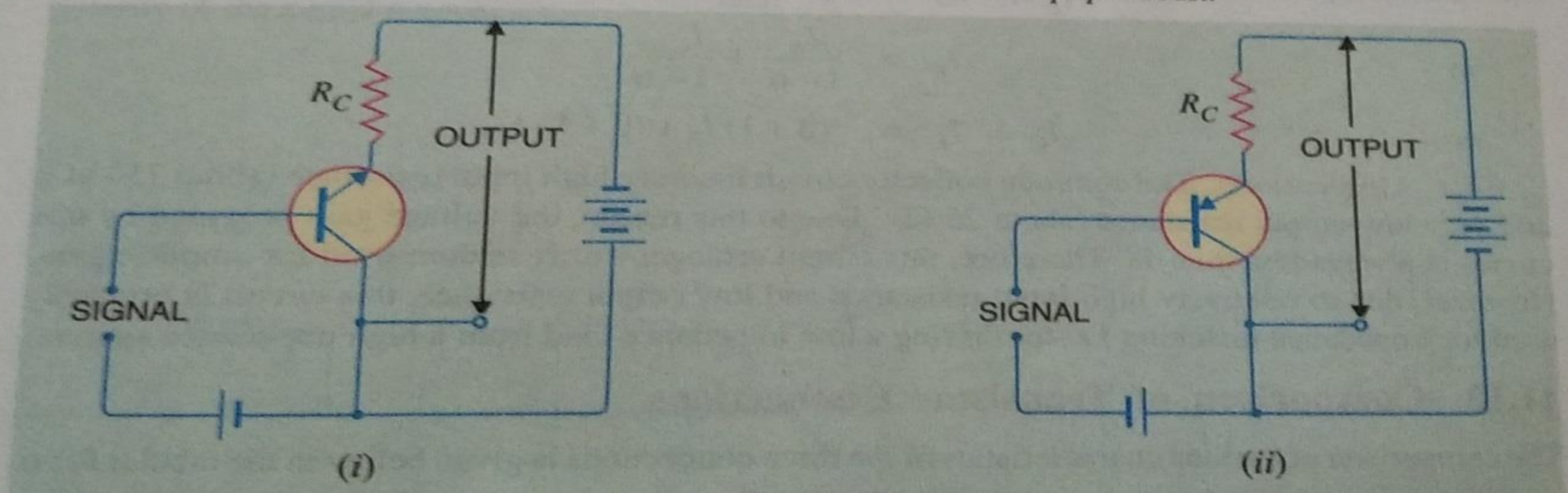

(*i*) (*ii*)

Fig. 11.25

(*i*) **Current amplification factor γ.** In common collector circuit, input current is the base current I_B and output current is the emitter current I_E. Therefore, current amplification in this circuit

✓ Common Collector Configuration:

- ✓ In this configuration, the base terminal of the transistor serves as the input, the emitter terminal is the output and the collector terminal is common for both input and output.

- ✓ Hence, it is named as common collector configuration.

- ✓ The input is applied between the base and collector while the output is taken from the emitter and collector.

Common-Collector Configuration

- It is used primarily for impedance-matching purpose since it has a high input impedance and low output impedance.
- The load resistor can be connected from emitter to ground.
- The collector is tied to ground and the circuit resembles common-emitter circuit.
- The output set relates an output current (I_E) to an output voltage (V_{CE}) *for various of* level of input current (I_B).

Common collector

- Common collector amplifier also known as an **emitter follower** typically used as a voltage buffer.
- In this circuit
  - The base terminal serves as the input,
  - The emitter is the output
  - The collector is common.
- Features:
  - Moderate/high input impedance.
  - Low output impedance.
  - Low (unity) voltage gain.
  - High Current Gain.

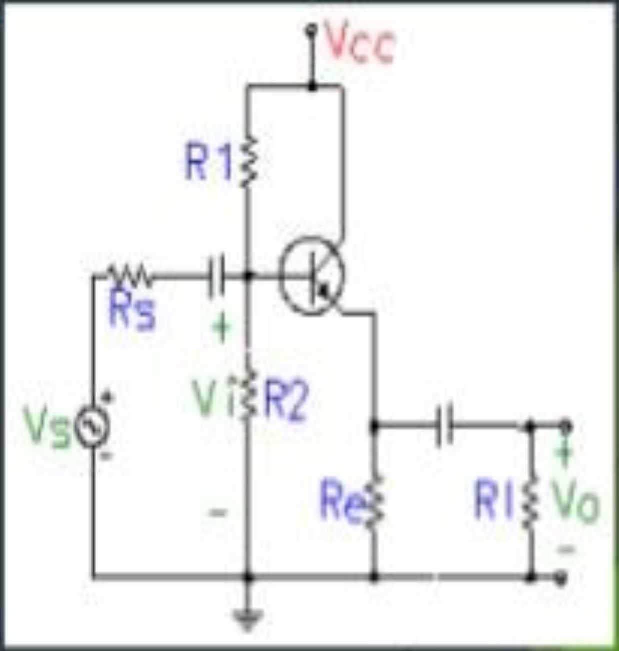

The CC amplifier circuit

Common collector configuration

- In this collector terminal is common for both input and output.
- It provides high current gain.

$$A_i = \frac{output\ current}{input\ current}$$

$$A_i = \frac{I_E}{I_B}$$

$$A_i = \frac{I_C}{I_B} + 1$$

$$\beta = \frac{I_C}{I_B}$$

$$A_i = \beta + 1$$

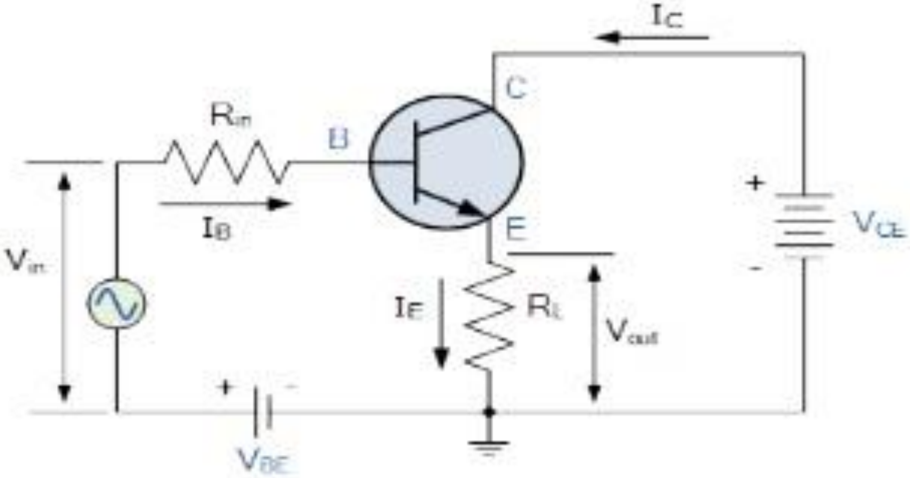

arrangement can be defined as under :

The ratio of change in emitter current (ΔI_E) to the change in base current (ΔI_B) is known as **current amplification factor** *in common collector (CC) arrangement i.e.*

$$\gamma = \frac{\Delta I_E}{\Delta I_B}$$

This circuit provides about the same current gain as the common emitter circuit as $\Delta I_E \simeq \Delta I_C$. However, its voltage gain is always less than 1.

Relation between γ and α

$$\gamma = \frac{\Delta I_E}{\Delta I_B} \qquad \text{...(i)}$$

$$\alpha = \frac{\Delta I_C}{\Delta I_E} \qquad \text{...(ii)}$$

Now $\quad I_E = I_B + I_C$

or $\quad \Delta I_E = \Delta I_B + \Delta I_C$

or $\quad \Delta I_B = \Delta I_E - \Delta I_C$

Substituting the value of ΔI_B in exp. (*i*), we get,

$$\gamma = \frac{\Delta I_E}{\Delta I_E - \Delta I_C}$$

Dividing the numerator and denominator of R.H.S. by ΔI_E, we get,

$$\gamma = \frac{\frac{\Delta I_E}{\Delta I_E}}{\frac{\Delta I_E}{\Delta I_E} - \frac{\Delta I_C}{\Delta I_E}} = \frac{1}{1-\alpha} \qquad \left(\because \alpha = \frac{\Delta I_C}{\Delta I_E}\right)$$

$$\therefore \quad \gamma = \frac{1}{1-\alpha}$$

(*ii*) Expression for collector current

We know $\quad I_C = \alpha I_E + I_{CBO}$ (See Art. 11.8)

Also $\quad I_E = I_B + I_C = I_B + (\alpha I_E + I_{CBO})$

$\therefore \quad I_E(1-\alpha) = I_B + I_{CBO}$

or $\quad I_E = \frac{I_B}{1-\alpha} + \frac{I_{CBO}}{1-\alpha}$

or $\quad I_C \simeq I_E = {}^*(\beta + 1) I_B + (\beta + 1) I_{CBO}$

Input characteristics

- It is a curve which shows the relationship between the base current, I_B and the collector base voltage V_{CB} at constant V_{CE} This method of determining the characteristic is as follows.
- First, a suitable voltage is applied between the emitter and the collector.
- Next the input voltage V_{CB} is increased in a number of steps and corresponding values of I_E are noted.
- The base current is taken on the y-axis, and the input voltage is taken on the x-axis. Fig. shows the family of the input characteristic at different collector- emitter voltages.

Input characteristics

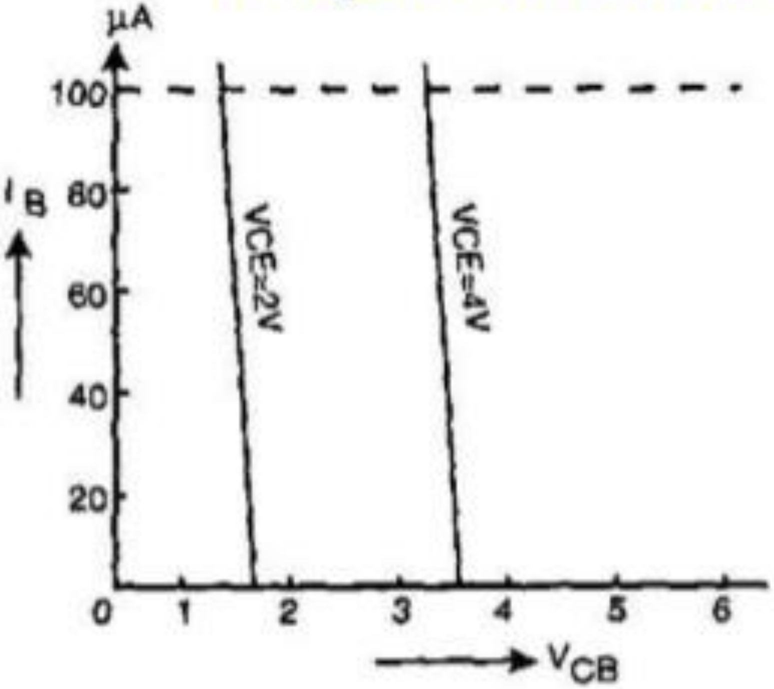

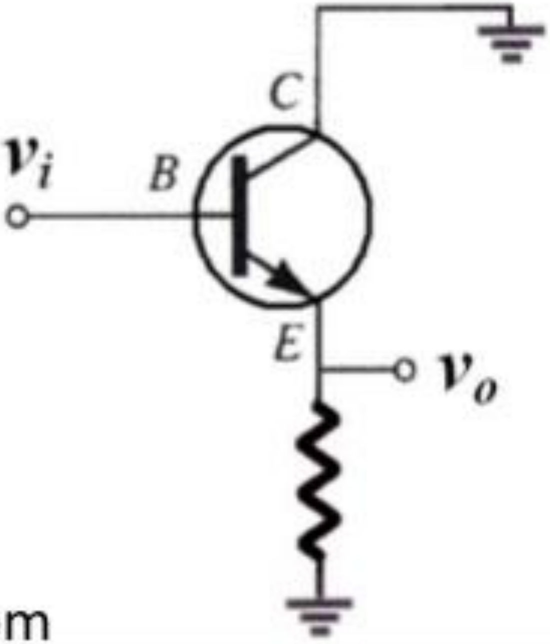

Figure: Common-collector circuit used for impedance-matching purpose

- The following points may be noted from the family of characteristic curves.
- Its characteristic is quite different from those of common base and common emitter circuits.
- When V_{CB} increases, IB is decreased.

Output characteristics

- This is almost the same as the output characteristics of common-emitter circuit, which are the relations between I_C *and* V_{CE} for various of level of input current I_B.

Since that: $I_E \cong I_C$.

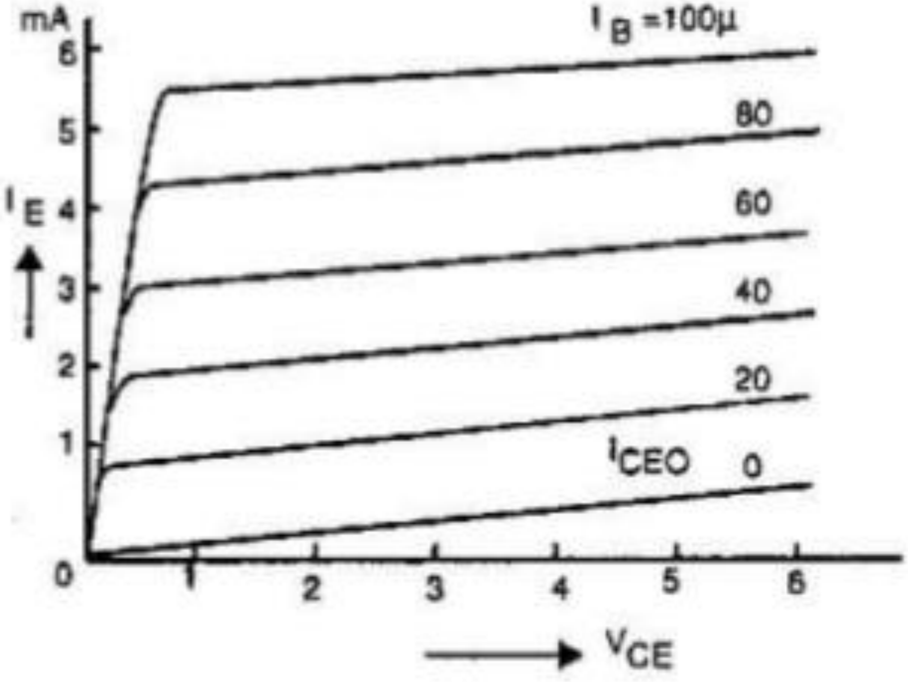

Figure: Output characteristics for common-collector transistor

Experimental Output of CC Amplifier.

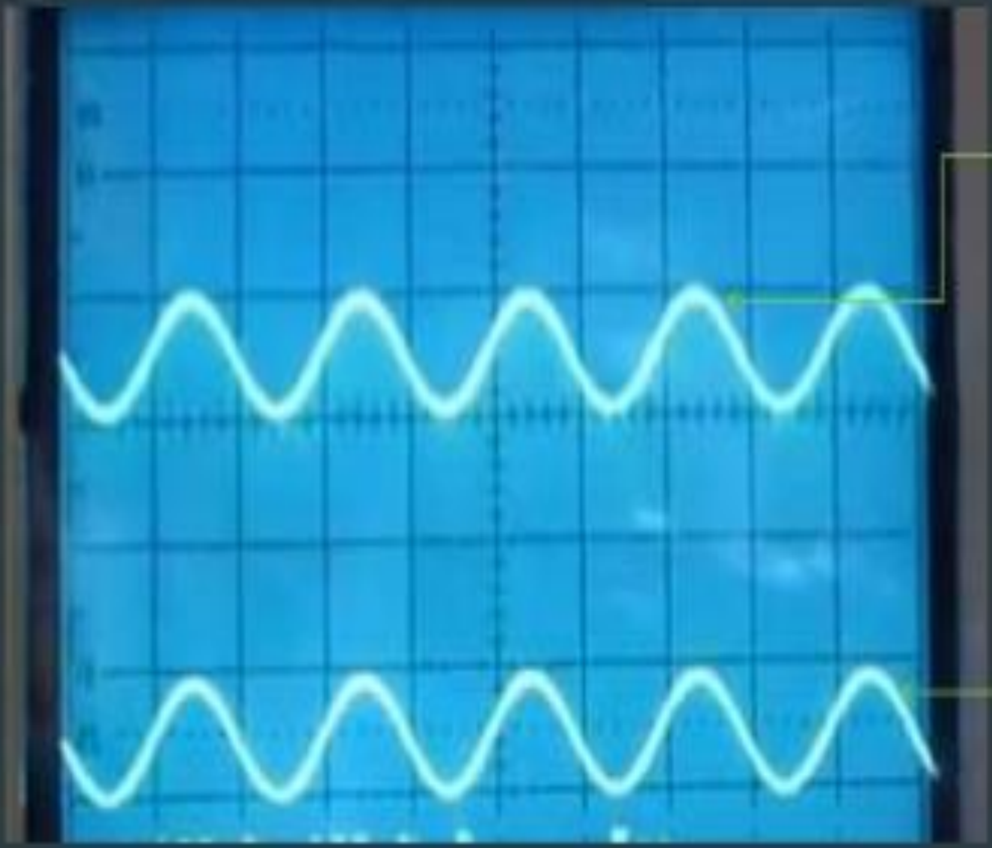

Signal output

Signal Input

	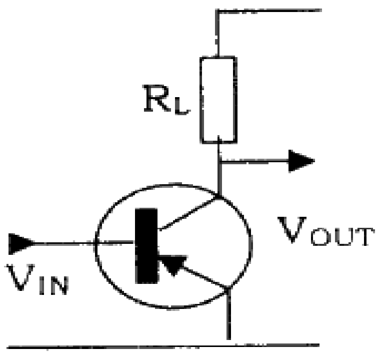 	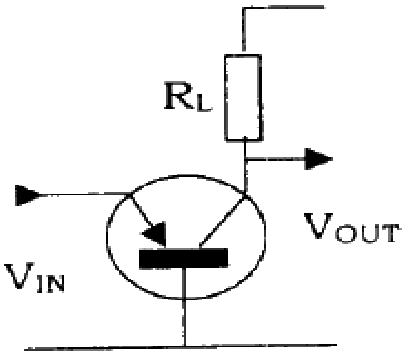 	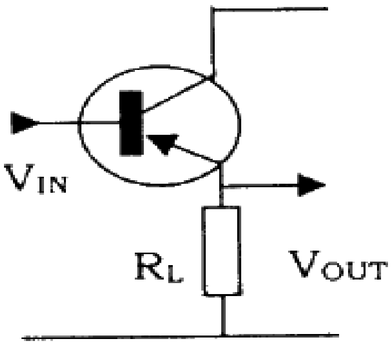
	COMMON EMITTER	COMMON BASE	COMMON COLLECTOR
CURRENT GAIN	20 to 200	< 1 (0.95 to 0.995)	20 to200
VOLTAGE GAIN	100 to 600	500 to 800	< 1
POWER GAIN	High	Medium	Low
INPUT IMPEDANCE	500 to 2000Ω	50 to 200Ω	20kΩ to 100kΩ
OUTPUT IMPEDANCE	10kΩ to 50kΩ	100kΩ to 1MΩ	20Ω to 500Ω
INPUT-OUTPUT PHASE RELATIONSHIP	180° out of phase	In phase	In phase
TYPICAL USE	Normal amplifier	Impedance matching (low to high)	Impedance matching (high to low)

Thank You